SYSDRIVE 3G3IV
High-performance/Low noise General-purpose Inverter

Installation/Instruction Manual

Revised June 1995

Notice:

OMRON products are manufactured for use according to proper procedures by a qualified operator and only for the purposes described in this manual.

The following conventions are used to indicate and classify precautions in this manual. Always heed the information provided with them. Failure to heed precautions can result in injury to people or damage to the product.

DANGER! Indicates information that, if not heeded, is likely to result in loss of life or serious injury.

WARNING Indicates information that, if not heeded, could possibly result in loss of life or serious injury.

Caution Indicates information that, if not heeded, could result in relatively serious or minor injury, damage to the product, or faulty operation.

OMRON Product References

All OMRON products are capitalized in this manual. The word “Unit” is also capitalized when it refers to an OMRON product, regardless of whether or not it appears in the proper name of the product.

The abbreviation “Ch,” which appears in some displays and on some OMRON products, often means “word” and is abbreviated “Wd” in documentation in this sense.

The abbreviation “PC” means Programmable Controller and is not used as an abbreviation for anything else.

Visual Aids

The following headings appear in the left column of the manual to help you locate different types of information.

Note Indicates information of particular interest for efficient and convenient operation of the product.

1, 2, 3... 1. Indicates lists of one sort or another, such as procedures, checklists, etc.

TABLE OF CONTENTS

SECTION 6

About this Manual:

This manual gives instructions and the installation procedure of the SYSDRIVE 3G3IV General-purpose Inverter

Section 1 This section gives general information and instructions on the SYSDRIVE 3G3IV General-purpose Inverter.

Section 2 This section describes the wiring procedure and the accessories needed. Also includes an interconnection diagram.

Section 3 Describes the operating procedures using flow diagrams.

Section 4 Describes the routine checks required for maintenance. Also lists possible failure indications and the corrective actions to be taken.

Section 5 Describes the terminal functions of the main and control circuits as well as the V/F pattern selections required.

Section 6 This section illustrates the interconnections for various SYSDRIVE 3G3IV models.

Appendix A Lists the various constants and specifications of the SYSDRIVE 3G3IV.

Appendix B Lists the optional equipment that may be used with the SYSDRIVE 3G3IV.

Appendix C Lists the physical dimensions for the SYSDRIVE 3G3IV models described herein.

WARNING Failure to read and understand the information provided in this manual may result in personal injury or death, damage to the product, or product failure. Please read each section in its entirety and be sure you understand the information provided in the section and related sections before attempting any of the procedures or operations given.

SECTION 1
Introduction and Installation

This section contains an introduction to the SYSDRIVE 3G3IV and the information required to install the UNIT.

1-1 What is an “Inverter”?

An inverter is a device to convert a three-phase AC commercial power supply to DC with an inverter section to produce AC variable frequency voltage from this converted DC. This AC variable frequency voltage can then be used for speed control of three-phase squirrel-cage induction motors.

DANGER! 1) After turning off the main circuit power supply, do not touch circuit components until “CHARGE” lamp is extinguished. The capacitors are still charged and can be quite dangerous.

2) Do not connect or disconnect wires and connectors while power is applied to the circuit.

3) Do not check signals during operation.

4) Be sure to ground SYSDRIVE 3G3IV using the ground terminal G (E).

5) Never connect main circuit output terminals T1 (U), T2 (V), T3 (W) to AC main circuit power supply.

Caution 1) All the potentiometers of SYSDRIVE 3G3IV have been adjusted at the factory. Do not change their settings unnecessarily.

2) Do not make withstand voltage test on any part of the SYSDRIVE 3G3IV unit. It is electronic equipment using semi-conductors and vulnerable to high voltage.

3) Control PC board employs CMOS ICs which are easily damaged by static electricity. Do not touch the CMOS elements.

1-2 Receiving

This SYSDRIVE 3G3IV has been put through demanding tests at the factory before shipment. After unpacking, check for the following.

- Verify the part numbers with the purchase order sheet and/or packing slip.
- Transit damage.

If any part of SYSDRIVE 3G3IV is damaged or lost, immediately notify the shipper.

1-3 Name Plate Data

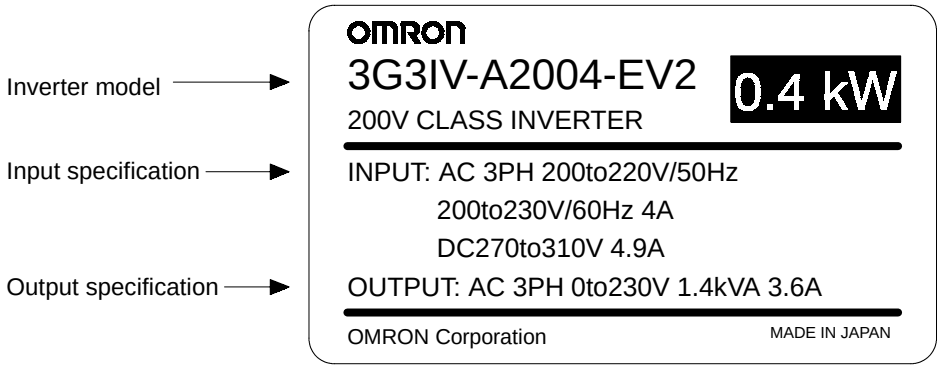

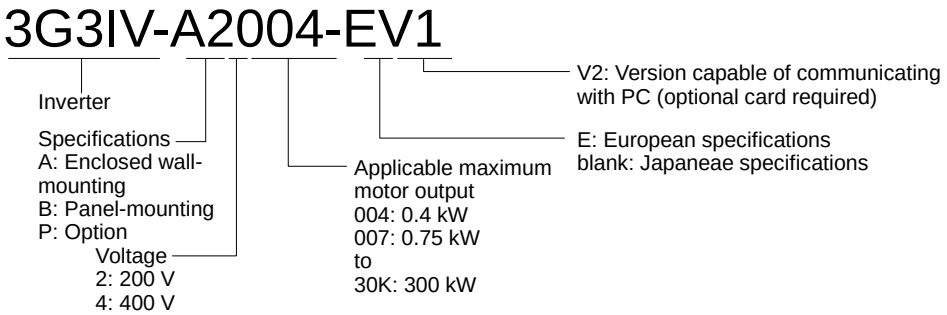

1-4 Installation

Caution Never move, lift or handle the SYSDRIVE 3G3IV cabinet by front cover or terminal stands. Lift the cabinet from the bottom.

1-4-1 Location

Location of the equipment is important to achieve proper performance and normal operating life. The SYSDRIVE 3G3IV units should be installed in areas where the following conditions exist.

- Ambient temperature: −10° to 40°C, 14° to 104°F (For enclosed type), −10° to 45°C, 14° to 113°F (For open chassis type)
- Protected from rain or moisture.
- Protected from direct sunlight.
- Protected from corrosive gases or liquids.
- Free from airborne dust or metallic particles.
- Free from vibration.
- Free from magnetic noise.

Caution To house multiple SYSDRIVE 3G3IVs in a switchgear, install a cooling fan or some other means to cool the air entering the inverter below 45°C (113°F).

1-4-2 Mounting Space

Install SYSDRIVE 3G3IV vertically and allow sufficient space for effective cooling as shown below in Fig. 1.

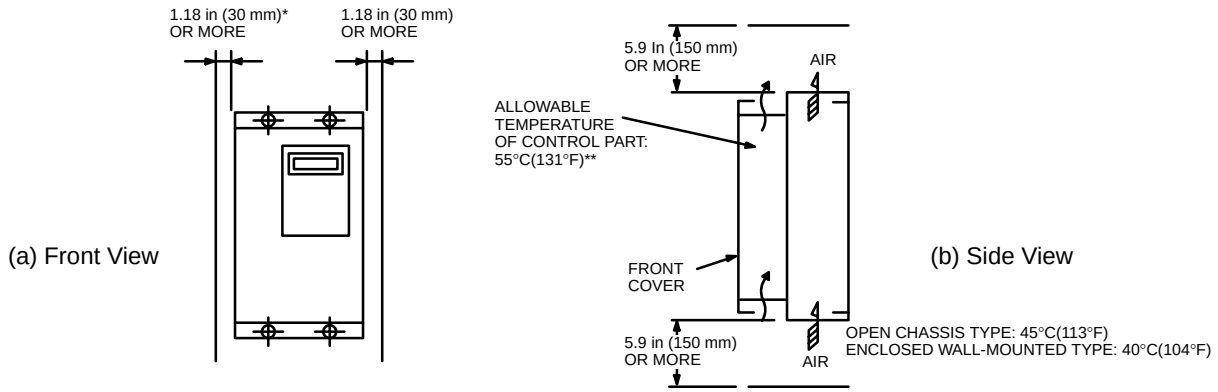

Fig. 1 Mounting Spaces

* 3.9in (100 mm) for models 3G3IV-B4110-E or B4150-E
3.15in (80 mm) for models 3G3IV-B4180-E or B4220-E
** Allowable temperature up to 50°C(122°F) when front cover is removed.

SECTION 2
Wiring

This section describes the SYSDRIVE 3G3IV wiring requirements and includes a interconnection diagram as well as a testing procedure.

2-1 Connections

The following shows an interconnection diagram. With digital operator, the motor can be operated by wiring the main circuit only. (Terminal ◎ shows main circuit and ◯ control circuit)

Important Use listed closed-loop connectors sized for the wire gauge involved. Connectors are to be installed using the correct crimp tool specified by the connector manufacturer.

Caution The connections of control circuit terminals 1 through 27 do not follow the terminal numbering order. To connect them properly, follow the figure below.

11	12	13	14	15	16	17	25	26	27
1	2	3	4	5	6	7	8	21	22

9	10	18	19	20

Example of Model 3G3IV-A2007-E.

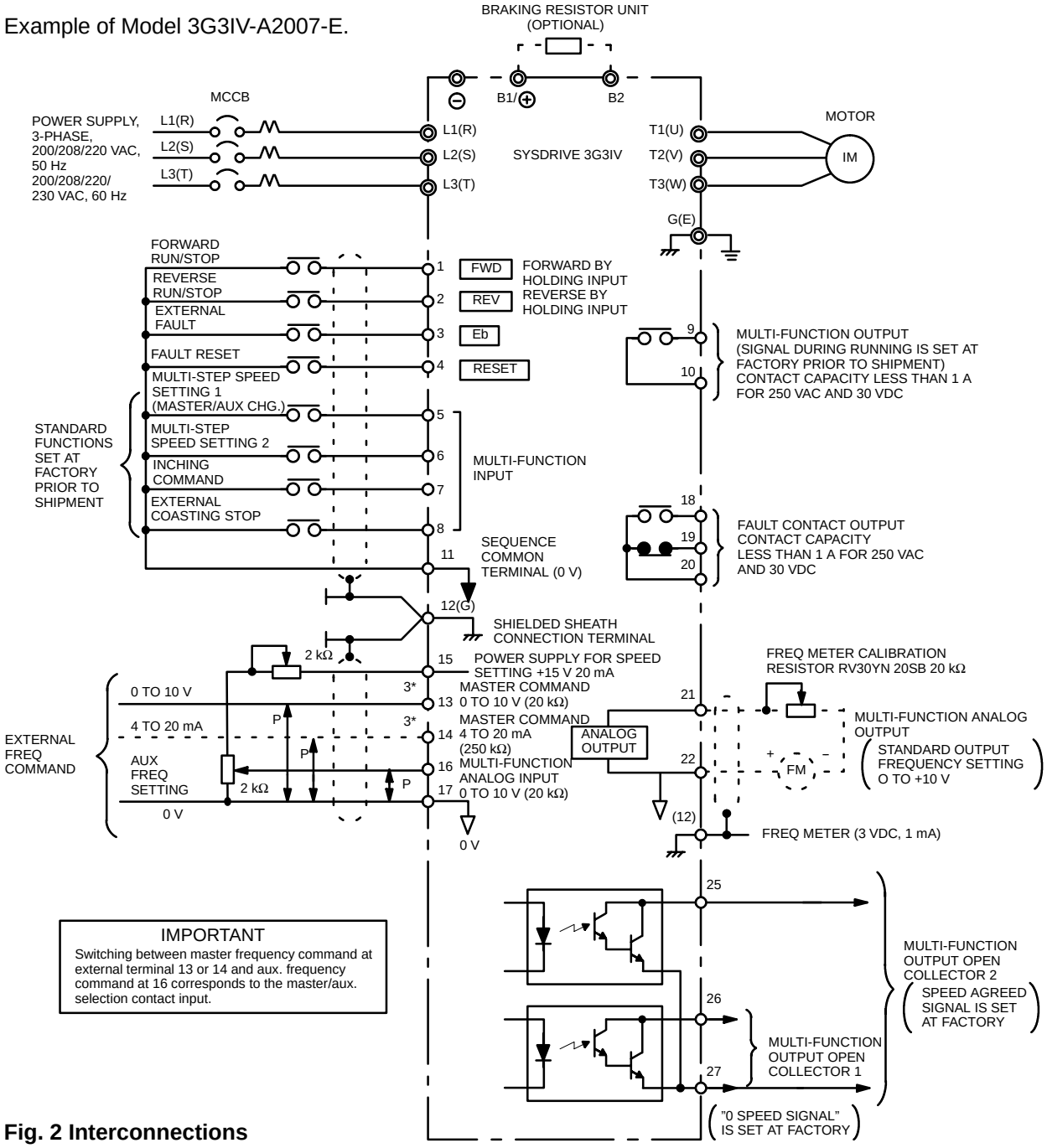

Fig. 2 Interconnections

Note 1. indicates shielded leads and twisted-pair shielded leads.

2. External terminal 15 of +15V has maximum output current capacity of 20mA.
3. Either external terminal 13 or 14 can be used.
4. Multi-function analog output is an exclusive meter output such as frequency meter etc. and not available for the feed back control system. Use analog monitor cards (Model PAO08 or PAO12) for the control system.
5. 12(G) indicates inverter frame earth ground.
6. Install an input RFI filter when operating at a high carrier frequency.
7. Use shielded cable if the motor is more than 30 m from the Inverter.
8. Use an AC reactor when driving more than one motor with one Inverter.

2-2 Molded-case Circuit Breaker (MCCB)

Be sure to connect MCCBs between power supply and SYSDRIVE 3G3IV input terminals L1 (R), L2 (S), L3 (T). Recommended MCCBs are listed in the table below.

When a ground fault interrupter is used, select the one with no influence for high frequency, and setting current should be 200mA or over and operating time, 0.1 s or over to prevent malfunction.

Molded-case Circuit Breakers and Magnetic Contactors

SYSDRIVE				Molded-case circuit breaker or fuse
Model 3G3IV		Capacity	Rated output current	Rated current
200 to 230V	A2004-□	1.4	3.2	6 A
	A2007-□	2.1	4.8	10 A
	A2015-□	2.7	6.4	20 A
	A2022-□	4.1	9.6	20 A
	A2037-□	6.9	16	30 A
	A2055-□	10.3	24	50 A
	A2075-□	13.7	32	60 A
	B2110-□	20.6	48	100 A
	B2150-□	27.4	64	100 A
	B2185-□	34	80	150 A
	B2220-□	41	96	150 A
	B2300-□	54	130	225 A
	B2370-□	68	160	225 A
	B2450-□	78	183	300 A
	B2550-□	95	224	400 A
	B2750-□	130	300	600 A
400 to 460 V	A4004-□	1.4	1.6	5 A
	A4007-□	2.2	2.6	5 A
	A4015-□	3.4	4.0	10 A
	A4022-□	4.1	4.8	10 A
	A4037-□	6.9	8	20 A
	A4055-□	10.3	12	20 A
	A4075-□	13.7	16	30 A
	B4110-□	20.6	24	50 A
	B4150-□	27.4	32	60 A
	B4185-□	34	40	80 A
	B4220-□	41	48	100 A
	B4300-□	54	64	100 A
	B4370-□	68	80	150 A
	B4450-□	82	96	150 A
	B4550-□	110	128	225 A
	B4750-□	140	165	300 A
	B411K-□	200	224	400 A

Model 3G3IV		Capacity	Rated output current	Rated current
400 to 460 V	B416K-□	250	300	600 A
	B418K-□	290	340	600 A
	B422K-□	380	450	800 A
	B430K-□	510	600	1,000 A

2-3 Surge Absorber

For the surge absorbers should be connected to the coils of relays, magnetic contactors, magnetic valves, or magnetic relays. Select type from the table below.

Surge Absorbers

Coils of magnetic contactor and control relay		Surge absorber*	
		Model	Specifications
200 to 230V	Large-size Magnetic Contactors	DCR2-50A22E	230 VAC 0.5mF + 200W
	Control Relay LY-2, -3 (OMRON) MM-2, -4 (OMRON)	DCR2-10A25C	250 VAC 0.1mF + 100W
400 to 460V Units		DCR2-50D100B	1000VDC 0.5mF + 220W

*Made by MARCON Electronics. (Marketed in Japan.)

2-4 Wire Sizes

The next 3 tables show the wire sizes, wire types, and the placement of the closed-loop connectors respectively.

200V Class Wire Size

Circuit	Model 3G3IV	kVA	Terminal symbol	Terminal screw	75°C Copper wire range		Wire type
					AWG	mm^2	
Main	A2004-□	1.4	L1(R), L2(S), L3(T), (–), B1/(+), B2, T1(U), T2(V), T3(W)	M4	14 to 10	2 to 5.5	Power Cable: 600 V vinyl sheathed lead or equivalent
			G(E)		14 to 10	2 to 5.5	
	A2007-□	2.1	L1(R), L2(S), L3(T), (–), B1/(+), B2, T1(U) T2(V), T3(W)	M4	14 to 10	2 to 5.5	
			G(E)		14 to 10	2 to 5.5	
	A2015-□	2.7	L1(R), L2(S), L3(T), (–), B1/(+), B2, T1(U), T2(V), T3(W)	M4	14 to 10	2 to 5.5	
			G(E)		12 to 10	3.5 to 5.5	
	A2022-□	4.1	L1(R), L2(S), L3(T), (–), B1/(+), B2, T1(U), T2(V), T3(W)	M4	14 to 10	2 to 5.5	
			G(E)		12 to 10	3.5 to 5.5	
	A2037-□	6.9	L1(R), L2(S), L3(T), (–), B1/(+), B2,, T1(U), T2(V), T3(W)	M4	10	5.5	
			G(E)		10	5.5	

Circuit	Model 3G3IV	kVA	Terminal symbol	Terminal screw	75°C Copper wire range		Wire type
					AWG	mm^2	
Main	A2055-□	10.3	L1(R), L2(S), L3(T), (–), B1/(+), B2, T1(U), T2(V), T3(W)	M5	8	8	Power Cable: 600 V vinyl sheathed lead or equivalent
			G(E)		10	5.5	
	A2075-□	13.7	L1(R), L2(S), L3(T), (–), B1/(+),B2, T1(U), T2(V), T3(W)	M5	8	8	
			G(E)		10	5.5	
	B2110-□	20.6	L1(R), L2(S), L3(T), B0/(–), B1/(+), T1(U), T2(V), T3(W)	M6	4	22	
			(E)	*	8 to 2	8 to 38	
			l_1 (r), l_2(s)	M4	14 to 10	2 to 5.5	
	B2150-□	27.4	L1(R), L2(S), L3(T), B0/(–), B1/(+), T1(U), T2(V), T3(W)	M8	3 to 1/0	30 to 60	
			G(E)	*	8 to 2	8 to 38	
			l_1(r), l_2(s)	M4	14 to 10	2 to 5.5	
	B2185-□	34	L1(R), L2(S), L3(T), B0/(–), B1/(+), T1(U), T2(V), T3(W)	M8	2 to 1/0	38 to 60	
			G(E)	*	6 to 2	14 to 38	
			l_1(r), l_2(s)	M4	14 to 10	2 to 5.5	
	B2220-□	41	L1(R), L2(S), L3(T), B0/(–), B1/(+), T1(U), T2(V), T3(W)	M8	1/0	60	
			G(E)	*	6 to 2	14 to 38	
			l_1(r), l_2(s)	M4	14 to 10	2 to 5.5	
	B2300-□	54	L1(R), L2(S), L3(T), ⊖(N), ⊕1(P1), ⊕3(P3), T1(U), T2(V), T3(W)	M10	3/0	86	
			G(E)	*	4 to 2	22 to 34	
			l_1(r), l_2(s)	M4	14 to 10	2 to 5.5	
	B2370-□	68	L1(R), L2(S), L3(T), ⊖(N), ⊕1(P1), ⊕3(P3), T1(U), T2(V), T3(W)	M10	1/0 x 2P	54 x 2P	
			G(E)	*	4 to 2	22 to 34	
			l_1(r), l_2(s)	M4	14 to 10	2 to 5.5	
	B2450-□	78	L1(R), L2(S), L3(T), ⊖(N), ⊕1(P1), ⊕3(P3), T1(U), T2(V), T3(W)	M10	2/0 x 2P	68 x 2P	
			G(E)	*	4 to 2	22 to 34	
			l_1(r), l_2(s)	M4	14 to 10	2 to 5.5	
	B2550-□	95	L1(R), L2(S), L3(T), ⊖(N), ⊕1(P1), ⊕3(P3), T1(U), T2(V), T3(W)	M10	4/0 x 2P	108 x 2P	
			G(E)	*	3 to 2	27 to 38	
			l_1(r), l_2(s)	M4	14 to 10	2 to 5.5	

Circuit	Model 3G3IV	kVA	Terminal symbol	Terminal screw	75°C Copper wire range		Wire type
					AWG	mm^2	
Main	B2750-□	130	L1(R), L2(S), L3(T), ⊖(N), ⊕1(P1), ⊕3(P3), T1(U), T2(V), T3(W)	M12	300MCM x 2P	152 x 2P	Power Cable: 600 V vinyl sheathed lead or equivalent
			G(E)	*	1 to 2/0	43 to 68	
			l_1(r), l_2(s)	M4	14 to 10	2 to 5.5	
Control	Common to all models	---	1 to 22 25 to 27	M3.5	18 to 14	0.75 to 2	Twisted shielded lead with class 1 wiring or equivalent

Note * indicates the use of Pressure Lug Terminals.

Important Lead size should be determined considering voltage drop of leads.

400V Class Wire Size

Circuit	Model 3G3IV	kVA	Terminal symbol	Terminal screw	75°C Copper wire range		Wire type
					AWG	mm^2	
Main	A4004-□	1.4	L1(R), L2(S), L3(T), (–), B1/(+), B2, T1(U), T2(V), T3(W)	M4	14 to 10	2 to 5.5	Power Cable: 600 V vinyl sheathed lead or equivalent
			G(E)		14 to 10	2 to 5.5	
	A4007-□	2.2	L1(R), L2(S), L3(T), (–), B1/(+), B2, T1(U), T2(V), T3(W)	M4	14 to 10	2 to 5.5	
			G(E)		14 to 10	2 to 5.5	
	A4015-□	3.4	L1(R), L2(S), L3(T), (–), B1/(+), B2, T1(U), T2(V), T3(W)	M4	14 to 10	2 to 5.5	
			G(E)		14 to 10	2 to 5.5	
	A4022-□	4.1	L1(R), L2(S), L3(T), (–), B1/(+), B2, T1(U), T2(V), T3(W)	M4	14 to 10	2 to 5.5	
			G(E)		14 to 10	2 to 5.5	
	A4037-□	6.9	L1(R), L2(S), L3(T), (–), B1/(+), B2, T1(U), T2(V), T3(W)	M4	14 to 10	2 to 5.5	
			G(E)	M5	12 to 10	3.5 to 5.5	
	A4055-□	10.3	L1(R), L2(S), L3(T), (–), B1/(+), B2, T1(U), T2(V), T3(W)	M4	12 to 10	3.5 to 5.5	
			G(E)	M5	12 to 10	3.5 to 5.5	
	A4075-□	13.7	L1(R), L2(S), L3(T), (–), B1/(+), B2, T1(U), T2(V), T3(W)	M4	10	5.5	
			G(E)	M5	10	5.5	
	B4110-□	20.6	L1(R), L2(S), L3(T), (–), B1/(+), B2, T1(U), T2(V), T3(W)	M5	8	8	
			G(E)	*	10 to 2	5.5 to 38	
			l_1(r), l_2(s)	M4	14 to 10	2 to 5.5	

Circuit	Model 3G3IV	kVA	Terminal symbol	Terminal screw	75°C Copper wire range		Wire type
					AWG	mm^2	
Main	B4150-□	27.4	L1(R), L2(S), L3(T), (–), B1/(+), B2, T1(U), T2(V), T3(W)	M5	8	8	Power Cable: 600 V vinyl sheathed lead or equivalent
			G(E)	*	10 to 2	5.5 to 38	
			l_1(r), l_2(s)	M4	14 to 10	2 to 5.5	
	B4185-□	34	L1(R), L2(S), L3(T), B0/(–), B1/(+), T1(U), T2(V), T3(W)	M6	6 to 4	14 to 22	
			G(E)	*	8 to 2	8 to 38	
			l_1(r), l_2(s)	M4	14 to 10	2 to 5.5	
	B4220-□	41	L1(R), L2(S), L3(T), B0/(–), B1/(+), T1(U), T2(V), T3(W)	M6	4	22	
			G(E)	*	8 to 2	8 to 38	
			l_1(r), l_2(s)	M4	14 to 10	2 to 5.5	
	B4300-□	34	L1(R), L2(S), L3(T), B0/(–), B1/(+), T1(U), T2(V), T3(W)	M8	3 to 1/0	30 to 60	
			G(E)	*	8 to 2	8 to 38	
			l_1(r), l_2(s)	M4	14 to 10	2 to 5.5	
	B4370-□	68	L1(R), L2(S), L3(T), B0/(–), B1/(+), T1(U), T2(V), T3(W)	M8	2 to 1/0	38 to 60	
			G(E)	*	6 to 2	14 to 38	
			l_1(r), l_2(s)	M4	14 to 10	2 to 5.5	
	B4450-□	82	L1(R), L2(S), L3(T), B0/(–), B1/(+), T1(U), T2(V), T3(W)	M8	1/0	60	
			G(E)	*	6 to 2	14 to 38	
			l_1(r), l_2(s)	M4	14 to 10	2 to 5.5	
	B4550-□	110	L1(R), L2(S), L3(T), ⊖(N), ⊕1(P1), ⊕3(P3), T1(U), T2(V), T3(W)	M10	3/10	86	
			G(E)	*	4 to 2	22 to 34	
			l_1(r), l_2 200(s200), l_2 400(s400), x, y	M4	14 to 10	2 to 5.5	
	B4750-□	140	L1(R), L2(S), L3(T), ⊖(N), ⊕1(P1), ⊕3(P3), T1(U), T2(V), T3(W)	M10	1/0 x 2P	54 x 2P	
			G(E)	*	4 to 2	22 to 34	
			l_1(r), l_2 200(s200), l_2 400(s400), x, y	M4	14 to 10	2 to 5.5	
	B411K-□	200	L1(R), L2(S), L3(T), ⊖(N), ⊕1(P1), ⊕3(P3), T1(U), T2(V), T3(W)	M10	4/0 x 2P	108 x 2P	
			G(E)	*	3 to 2	27 to 34	
			l_1(r), l_2 200(s200), l_2 400(s400), x, y	M4	14 to 10	2 to 5.5	

Circuit	Model 3G3IV	kVA	Terminal symbol	Terminal screw	75°C Copper wire range		Wire type
					AWG	mm^2	
	B416K-□	250	L1(R), L2(S), L3(T), ⊖(N), ⊕1(P1), ⊕3(P3), T1(U), T2(V), T3(W)	M12	250MCM x 2P	127 x 2P	Power Cable: 600 V vinyl sheathed lead or equivalent
			G(E)	*	1 to 2/0	43 to 68	
			I_1(r), I_2 200(s200), I_2 400(s400), x, y	M4	14 to 10	2 to 5.5	
	B418K-□	290	L1(R), L2(S), L3(T), ⊖(N), ⊕1(P1), ⊕3(P3), T1(U), T2(V), T3(W)	M16	350MCM x 2P	177 x 2P	
			G(E)	*	1 to 2/0	43 to 68	
			I_1(r), I_2 200(s200), I_2 400(s400), x, y	M4	14 to 10	2 to 5.5	
	B422K-□	380	L1(R), L2(S), L3(T), ⊖(N), ⊕1(P1), ⊕3(P3), T1(U), T2(V), T3(W)	M16	500MCM x 2P	253 x 2P	
			G(E)	*	1/0 to 2/0	54 to 68	
			I_1(r), I_2 200(s200), I_2 400(s400), x, y	M4	14 to 10	2 to 5.5	
	B430K-□	510	L1(R), L2(S), L3(T), ⊖(N), ⊕1(P1), ⊕3(P3), T1(U), T2(V), T3(W)	M16	900MCM x 2P	456 x 2P	
			G(E)	*	2/0	68	
			I_1(r), I_2 200(s200), I_2 400(s400), x, y	M4	14 to 10	2 to 5.5	
Control	Common to all models	---	1 to 22 25 to 27	M3.5	18 to 14	0.75 to 2	Twisted shielded lead with class 1 wiring or equivalent

Note * indicates the use of Pressure Lug Terminals.

Closed-Loop Connectors

Wire range		Terminal screw	Closed-loop connectors
AWG	mm^2		
22	0.5	M3.5, M4	1.25 to 3.5, 1.25 to 4
18	0.75		
16	1.25		
14	2	M4	2 to 4
		M5	2 to 5
12	3.5	M4	3.5 to 4
		M5	3.5 to 5
10	5.5	M4	5.5 to 4
		M5	5.5 to 5
8	8	M5	8 to 5
		M6	8 to 6
6	14	M6	14 to 6
4	22	M6	22 to 8
3	30	M8	30 to 8
2	38	M8	38 to 8
2	38	M10	38 to 10
1	50	M8	50 to 8
1/0	60	M10	60 to 10

2-5 Control Circuit

The external interconnection wiring must be performed with following procedures.

After completing SYSDRIVE 3G3IV interconnections, be sure to check that connections are correct. Never use control circuit buzzer check.

(1) Separation of control circuit leads and main circuit leads:
Signal leads 1 through 20 must be separated from main circuit leads L1 (R), L2 (S), L3 (T), B1/(+), B2, (–), B0/(–), T1 (U), T2 (V), T3 (W), and other power cables to prevent erroneous operation caused by noise interference.

(2) Control circuit leads 9 10 18 19 20 (contact output) must be separated from leads 1 to 8, 21 22 25 26 27 and 11 to 17.

Use the twisted shielded or twisted-pair shielded lead for the control circuit line and connect the shield sheath to the inverter terminal 12 (G). See Fig. 3.

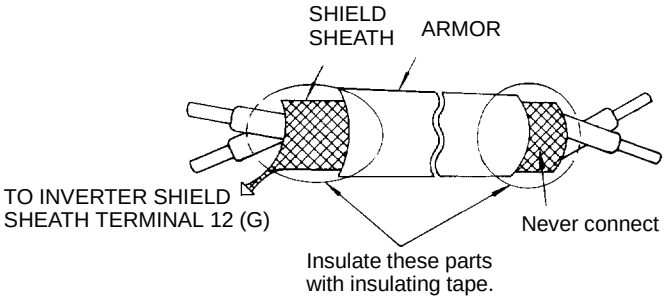

Fig. 3 Shielded Lead Termination

(3) Wiring distance:
It is recommended that the wiring distance of the signal leads (1 to 20) be 50 meters (164 feet) or below.

2-6 Main Circuit Input/Output

(1) Phase rotation of input terminals L1 (R), L2 (S), L3 (T) is available in either direction, clockwise and counterclockwise.

(2) When inverter output terminals T1 (U), T2 (V), and T3 (W) are connected to motor terminals T1 (U), T2 (V), and T3 (W), respectively, motor rotates counterclockwise, viewed from opposite drive end, upon forward operation command. To reverse the rotation interchange any two of motor leads.

(3) Never connect AC main circuit power supply to output terminals T1 (U), T2 (V), and T3 (W).

(4) Care should be taken to prevent contact of wiring leads with SYSDRIVE 3G3IV cabinet, for short-circuit may result.

(5) Never connect power factor correction capacitor or noise filter to SYSDRIVE 3G3IV output.

(6) Never open or close contactors in the output circuit unless inverter is properly sized.

2-7 Grounding

Ground the casing of the SYSDRIVE 3G3IV using ground terminal G (E).

(1) Ground resistance should be 100Ω or less.

(2) Never ground SYSDRIVE 3G3IV in common with welding machines, motors, and other large-current electrical equipment, or ground pole. Run the ground lead in a separate conduit from leads for large-current electrical equipment.

(3) Use the ground leads which comply with AWG standards and make the length as short as possible.

(4) Where several SYSDRIVE 3G3IV units are used side by side, all the units should preferably be grounded directly to the ground poles. However, connecting all the ground terminals of SYSDRIVE 3G3IV in parallel, and ground only one of SYSDRIVE 3G3IV to the ground pole is also permissible (Fig. 4). However, do not form a loop with the ground leads.

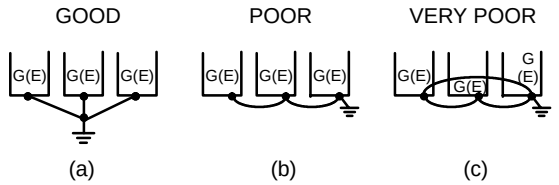

Fig. 4 Grounding of Three SYSDRIVE 3G3IV Units

2-8 Test Operation

To assure safety, prior to test operation disconnect the coupling or belt which connects the motor with the machine so that motor operation is isolated. If an operation must be performed while the motor si directly connected to the machine, use great care to avoid any possible hazardous condition.

Check before turning power ON After completion of installation and wiring, check for:

(1) proper wiring

(2) short circuit due to wire clippings

(3) loose screw-type terminals

(4) proper loads

Setting the line voltage selecting connector for the 400 V class 20.6 kVA and above:

The line voltage selecting connector shown in Fig. 5 must be set according to the type of main power source. Insert the connector at the position showing the appropriate line voltage. The UNIT is preset at the factory for 460 line voltage.

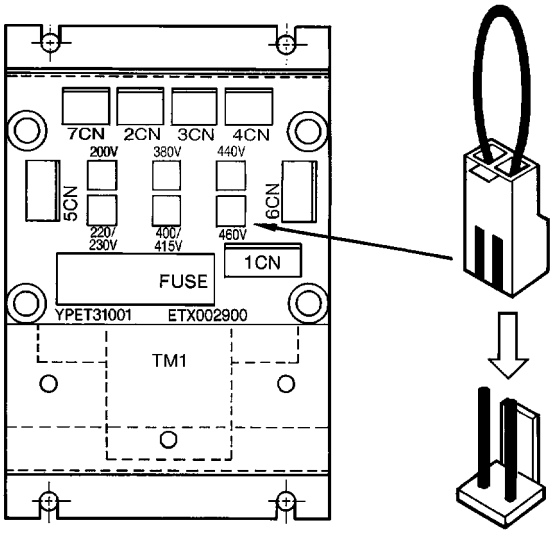

Fig. 5 Selection of Line Voltage

Setting the input voltage:

The factory setting for the 200V class is 200V, and for the 400V class it is 400V.

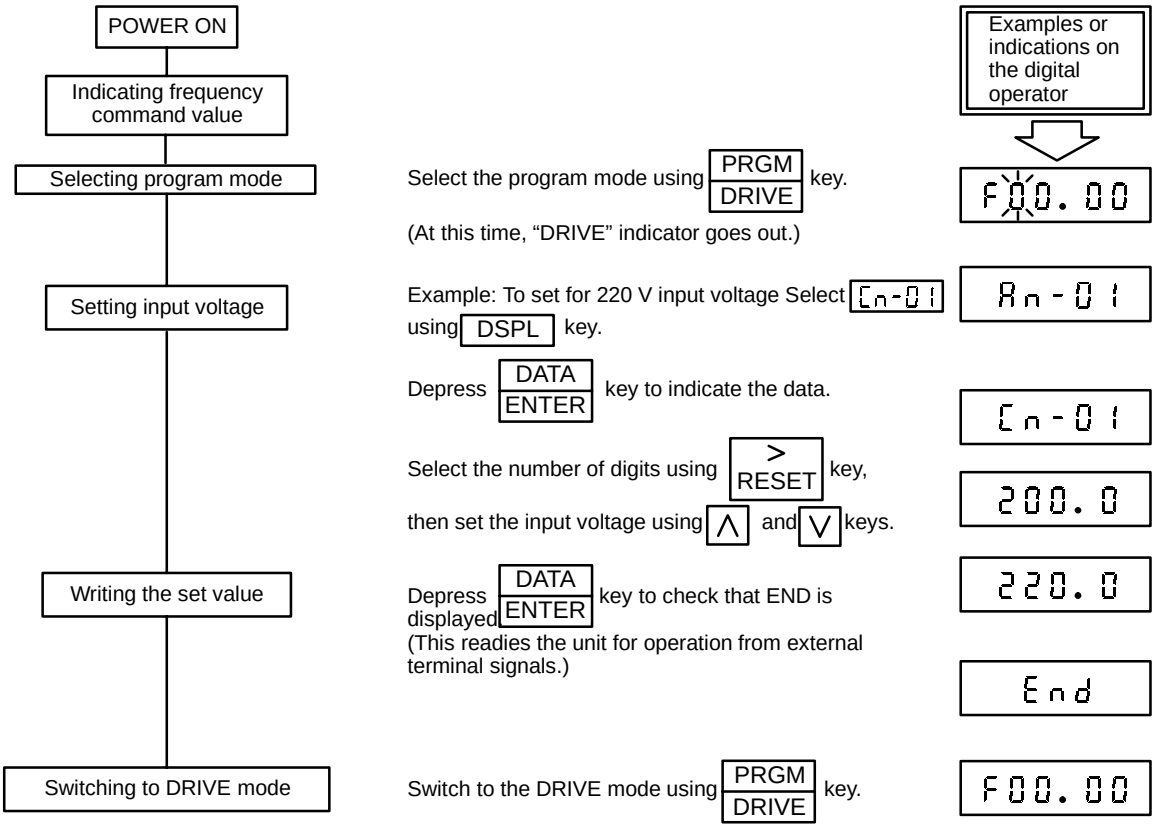

SECTION 3
Operation

This section describes the operation of the SYSDRIVE 3G3IV using flow diagrams and illustrations.

3-1 Digital Operator

Digital operator has DRIVE mode and PRGM mode. Selecting DRIVE mode enables the inverter to operate. PRGM mode enables the programs to be written in. DRIVE and PRGM modes can be switched by DRIVE/PRGM key only when stopped.

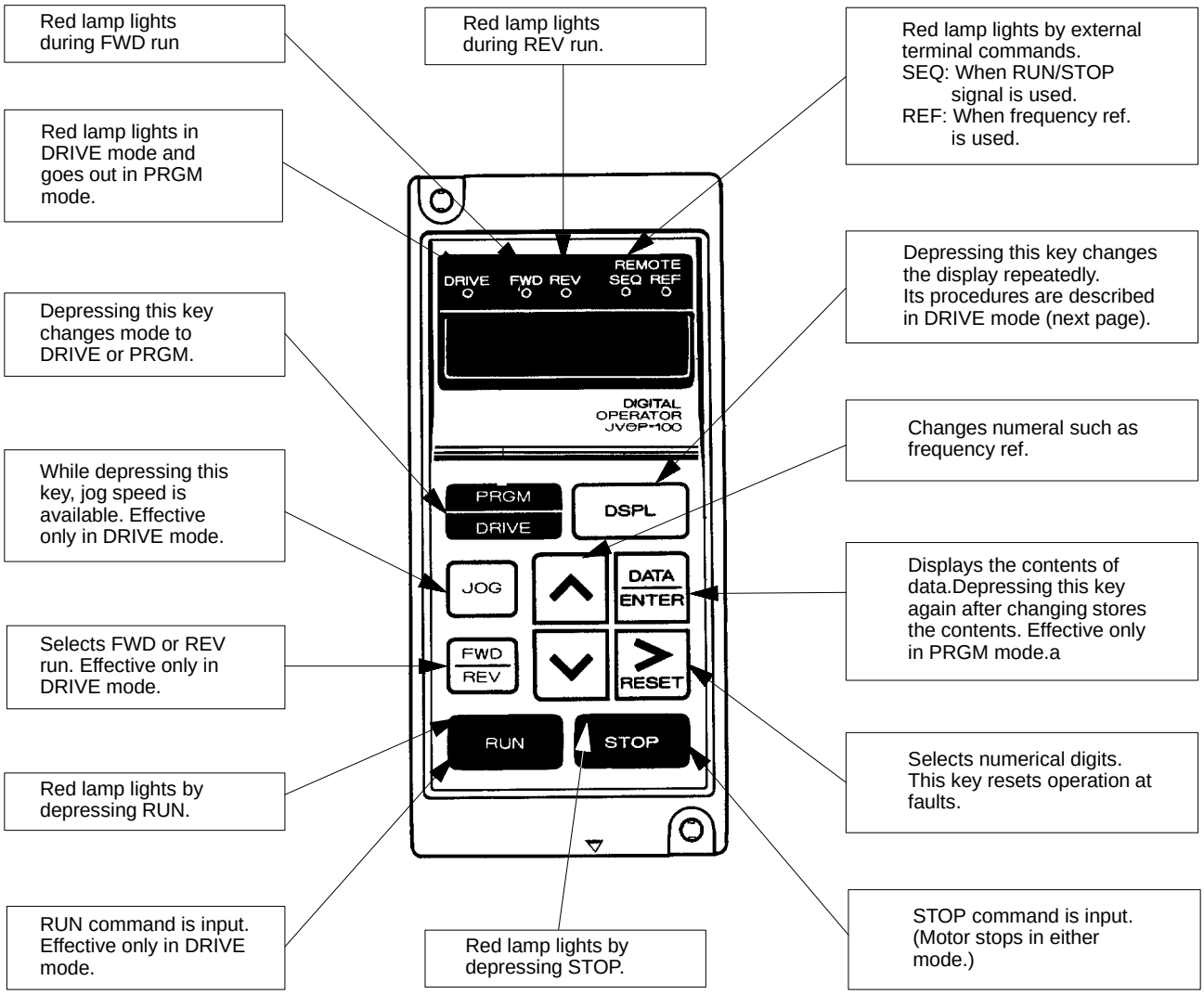

RUN or STOP lamp changes in accordance with the following operations:

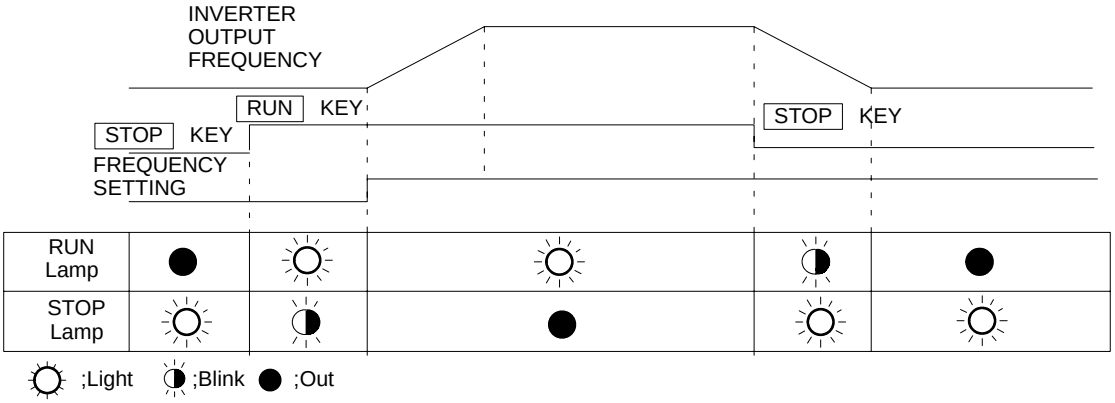

3-2 Drive Mode

Depressing DSPL (display selection key)

changes the display as follows:

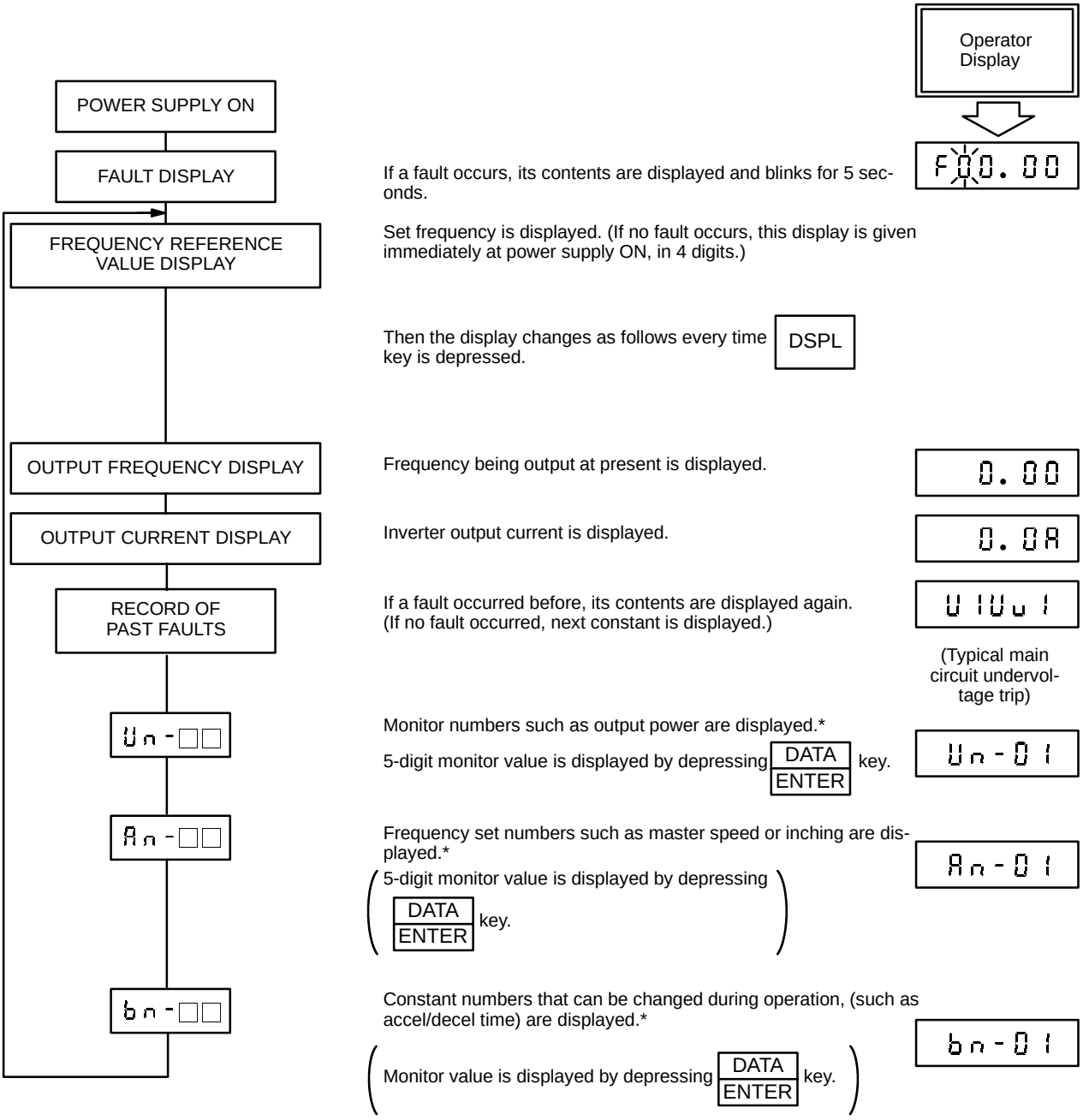

*Check for display constants in APPENDIX at end of this manual

**Display changes every time DSPL key is depressed.

3-3 Operation by Digital Operator (Set Prior to Shipment)

POWER SUPPLY ON		Operator Display
FREQUENCY REFERENCE VALUE DISPLAY	Depress DSPL key to display frequency reference value.	F00.00
FREQUENCY REFERENCE VALUE SET	Select a digit by > RESET key and set by ∧ or ∨ key.	F60.00
SET VALUE WRITE-IN	Depressing DATA ENTER key to set values. (The numbers stop blinking for approx. 2 sec.)	F60.00 (Stops for 2 sec.) F60.00 (Blinks again.)
ROTATING DIRECTION SET	Select motor rotating direction by FWD REV key. (Rotating direction selected here is displayed on the digital operator.)	FWD ● REV ○ (Typical FWD run)
OUTPUT FREQUENCY DISPLAY	Change to output frequency display by DSPL key.	0.00
OPERATION CHECK	Check motor operation by JOG key.	6.00
RUN	Start the operation by RUN key.	60.00 (Increased to 60 Hz)
STOP	Stop the operation by STOP key.	0.00 (Decreased to 0.0 Hz)

3-4 Operation by External Terminal Signals

		Operator Display
POWER SUPPLY ON		
FREQUENCY REFERENCE DISPLAY		F00.00
PRGM MODE SELECTION	Select PRGM mode by PRGM/DRIVE key. (DRIVE display is turned off.)	An-01
OPERATION CONDITIONS SET	Sn-01 is selected by DSPL key.	Sn-01
	Select a digit by > RESET key and set Sn-04 by ∧ or ∨ key.	Sn-04
	Depress DATA ENTER key to display data.	0011
	Select a digit by > RESET key and set the data to 0000 by ∧ or ∨ key.	0000
SET VALUE WRITE-IN	Depress DATA ENTER key to check for END display. (Operation by external terminal signals enabled.)	End
DRIVE MODE SELECTION	Change to the DRIVE mode by PRGM/DRIVE key.	F00.00
FREQUENCY SET	Check for frequency reference value of external terminals 13 or 14.	F60.00
OUTPUT FREQUENCY DISPLAY	Change to output frequency display by DSPL key.	0.00
OPERATION CHECK	Closed/open between terminals 7 to 11 to perform inching operation.	6.00
RUN	After checking for normal operation, close between external terminals 1 and 11 to perform FWD run.	60.00 (Increased to 60 Hz)
STOP	Open between external terminals 1 to 11 to stop.	0.00 (Decreased to 0.0 Hz)

3-5 Program (PRGM) Mode

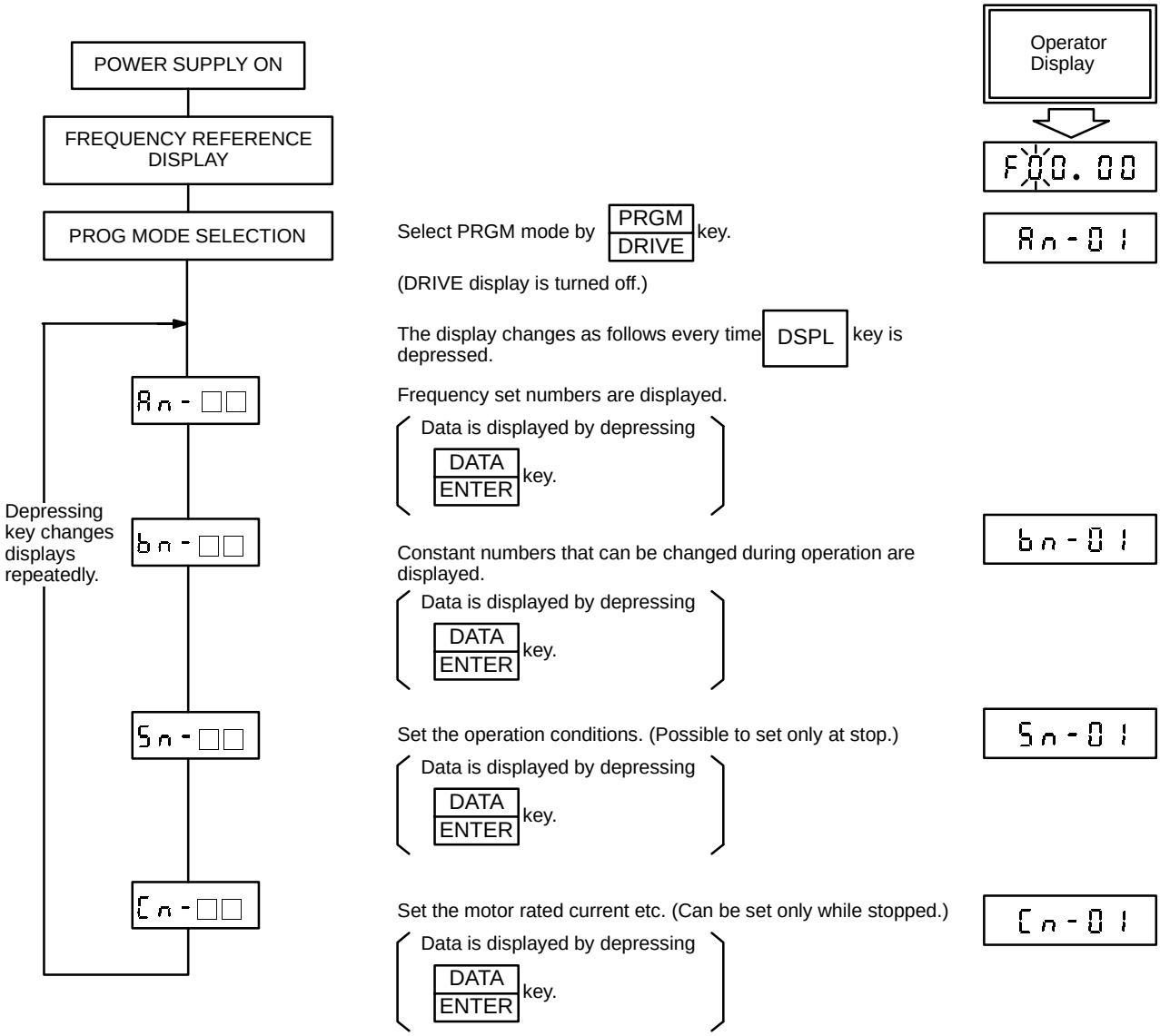

Typical Setting of Accel Time

Either DRIVE or PRGM mode can be selected.

(1) Depress [DSPL] key to select accel time constant [bn-01].

(2) Depress [DATA / ENTER] key to display internal data of accel time constant.

(Setting prior to shipment : [10.00])

(3) Set required acceleration time by using [> / RESET], [∧] or [∨] key.

The time can be set up to 6000 seconds in multiples of 0.1 second.

(Example of 12.5 seconds set : [12.5])

(4) Depress [DATA / ENTER] key to store the data. (If display reads end for approx. 1 sec, data has been accepted.)

SECTION 4
Maintenance and Failure Indication

This section describes the maintenance procedures required for the SYSDRIVE 3G3IV. Also includes failure indications of the UNIT and the corrective actions to be taken.

4-1 Maintenance

SYSDRIVE 3G3IV requires very few routine checks. It will function longer if it is kept clean, cool and dry, while observing the precautions listed in “Location”. Check for tightness of electrical connections, discoloration or other signs of overheating. Use the table below as the inspection guide. Before servicing, turn off AC main circuit power and be sure that CHARGE lamp is off.

Periodical Inspection

Component	Check	Corrective Action
External terminals, unit mounting bolts, connectors, etc.	Loosened screws	Tighten
	Loosened connectors	Tighten
Cooling fins	Build-up of dust and dirt	Blow with a dry compressed air of 4 to 6kg-cm^2 (57 to 85 Ibs. in^2) pressure.
Printed circuit board	Accumulation of conductive dust or oil mist.	Clean the board. If dust and oil cannot be removed, replace the board.
Cooling fan	For abnormal noise and vibration. Whether the cumulative operation time exceeds 20,000 hours or not.	Replace the cooling fan.
Power elements	Accumulation of dust and dirt	Blow with a dry compressed air of 4 to 6kg-cm^2 (57 to 85 Ibs. in^2) pressure.
Smoothing capacitor	Discoloration or odor	Replace the capacitor or inverter unit.

Note Operating conditions as follows:

- Ambient temperature: 30°C (86°F)/yearly mean
- Load factor: 80% or below
- Operation rate: 12 hours or below/day

4-2 Failure Indication and Details

As the table below shows, the failures that the SYSDRIVE 3G3IV detects are classified into troubles and alarms. If a problem occurs, the fault contact is output and the unit coasts to a stop. When an alarm is issued, the digital operator indicates the alarm for warning.

Caution Never replace the DC bus fuse without first checking the output transistors.

Failure Indication and Details

Indication	Failure indication items	Description	Corrective action
uU1	Low voltage (PUV)	Two seconds are counted after the detection of low voltage.	Check the wiring of line units (at power supply side). Correct the power supply voltage.
uU2	Low voltage (CUV)	Control circuit becomes low voltage during operation.	
uU3	Low voltage (MC-ANS fault)	Main circuit magnetic contactor does not operate correctly.	
%c	Overcurrent	Inv. output current > 120% of transistor rated current	Check the motor winding resistance and increase the accel time.
%U	Overvoltage	Detection level: Approx: 400V for 200V class Approx: 800V for 400V class Reset level: 385V	Increase the decel time and/or add a braking resistor.
fu	Fuse blown	---	Check short-circuit at load and ground fault etc.
%h	Radiation fin overheated	Fin temperature 90°C (194°F)	Check fan or ambient temperature (less than 45°C, 113°F).
%l1	Overload	Protect the motor.	Measure motor temperature-rise and reduce load, then reset V/f.
%l2	Overload	Protect the inverter.	Reduce load, and increase the accel time, then reset V/f.
%l3	Overtorque	For inv. output current > overtorque detection level and coasting stop selection at overtorque detection	---
rr	Regenerative transistor failure	---	Replace transistor.
rh	Braking resistor unit overheated	---	Check the state of input terminal with data un-07. Replace inverter if “1” is indicated as the state of open terminal.
ef3	External terminal 3 failure		
ef5	External terminal 5 failure		
ef6	External terminal 6 failure		
ef7	External terminal 7 failure		
ef8	External terminal 8 failure	Stop mode selection possible	Replace inverter. Check and secure the optional card connector.
cpf02	Control circuit failure	Inverter failure	
cpf03	NV-RAM (S-RAM) failure		
cpf04	NV-RAM (BCC, Access Code)		
cpf05	A/D convertor failure in CPU		
cpf06	Optional connection failure	---	---

4-3 Display Function Additions

Displays During Transmission Errors

If an transmission error should occur during SYSMAC BUS or SYSMAC BUS/2 communications, the display on the Digital Operator will be as shown below.

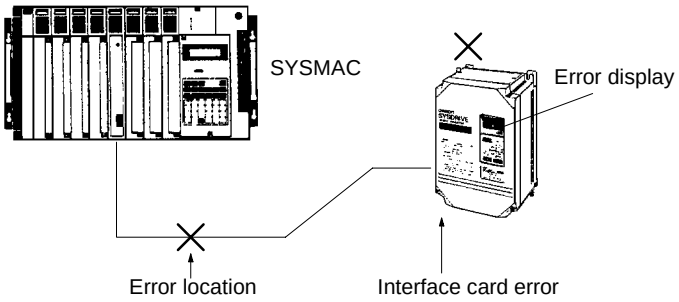

Display	Name	Contents
e-15 (E-15)	Transmission Path Error	There is an error in the transmission path. Check the transmission path.
e-10 (E-10)	Interface Card Error	There is an error in the interface card. Turn off the power to the SYSDRIVE 3G3IV, and then turn it on again. If the error persists, replace the card.

Display While Waiting for Communication Data Code

From the time that SYSMAC BUS or SYSMAC BUS/2 communications begins until the time that the data is successfully transmitted, the display on the Digital Operator will be as shown below.

Display	Name	Contents
call (CALL)	Communication Data Code Waiting	After the interface card has been installed and the SYSDRIVE 3G3IV has been powered up, the 3G3IV will display “CALL” and go to waiting status if either of the following conditions applies: 1) Transmission has not occurred. 2) There is a transmission error, and the data code has not been transmitted.

Note
1. If Sn-08 = xx11 (operation by inverter frequency or operation reference), CALL will not be displayed.
2. If only the operation reference bits of word *n* (bits 15 to 08) turn ON and OFF, the CALL display will not be cleared.

SECTION 5
Terminal Functions

This section describes the terminal functions of the main and control circuits. Also included is the V/F pattern selection for the SYSDRIVE 3G3IV.

5-1 Main Circuit

Model 3G3IV-□□□□□-□		A2004 to A2075 A4004 to A4075	B2110, B2150	B4110, B4150
Max Applicable Motor Output		200 VAC 0.5 to 10 Hp (0.4 to 7.5 kW) 400 VAC 0.5 to 10 Hp (0.4 to 7.5 kW)	200 VAC 15 Hp (11 kW) 200 VAC 20 Hp (15 kW)	400 VAC 15 Hp (11 kW) 400 VAC 20 Hp (15 kW)
Terminals	L_1(R)	Main circuit input power supply		
	L_2(S)			
	L_3(T)			
	T_1(U)	Inverter output		
	T_2(V)			
	T_3(W)			
	⊖(N)	Braking resistor unit (⊕1-⊖) DC power supply (⊕1-⊖) Main circuit capacitor (⊕3-⊖)		
	⊕3(P3)			
	⊕1(P1)			
	l_1(r)	---	Cooling fan input power supply (control power supply) l_1-l_2 200 to 230 VAC input	
	l_2(s)			
	l_1 200(s200)	---	---	
	l_2 400(s400)			
	G(E)	Ground terminal		

Model 3G3IV-□□□□□-□		B2185, B2220 B4185 to B4450	B2300 to B2750	B4550 to B430K
Max Applicable Motor Output		200 VAC 25 Hp (18.5 kW) 200 VAC 30 Hp (22 kW) 400 VAC 25 to 60 Hp (18.5 to 45 kW)	200 VAC 40 to 100 Hp (30 to 75 kW)	400 VAC 75 to 400 Hp (55 to 300 kW)
Terminals	L_1(R)	Main circuit input power supply		
	L_2(S)			
	L_3(T)			
	T_1(U)	Inverter output		
	T_2(V)			
	T_3(W)			
	⊖(N)	Braking resistor unit (⊕1-⊖) DC power supply (⊕1-⊖) Main circuit capacitor (⊕3-⊖)		
	⊕3(P3)			
	⊕1(P1)			
	l_1(r)	Cooling fan input power supply (control power supply) l_1-l_2 200 to 230 VAC input		---
	l_2(s)			Cooling fan input power supply l_1-l_2 200: 200 to 230 VAC input l_1-l_2 400: 380 to 460 VAC input
	l_1 200(s200)	---		
	l_2 400(s400)			
	G(E)	Ground terminal		

5-2 Control Circuit

Terminal	Functions		Signal
1	Forward operation (at closed)-stop signal (at open)		Photo-coupler insulation input +24 V, 8 mA
2	Reverse operation (at open)-stop (at open)		
3	External fault input fault at closed, normal at open		
4	Fault reset at closed		
5	Multifunction contact input: the following signals available to select. Forward/reverse select, run mode select, multispeed select, inching frequency select, accel/decel time select, external fault, external coasting stop, aux. input effective, speed search, energy-saving operation.		
6			
7			
8			
9	Multifunction contact output: one of the following signals available to output. During running output, zero speed, synchronized speed, arbitrary synchronized speed, frequency detection, overtorque, undervoltage, coasting stop, braking resistor overheat, alarm, fault.		Contact capacity: 250 VAC 1A or less 30 VDC 1 A or less
10			
11	Sequence control input common terminal		Sequence control input: 0 V
12(G)	Connection to shield sheath of signal lead		---
13	Master speed voltage reference		0 to +10 V (20kΩ)
14	Master speed current reference		4 to 20 mA (250Ω)
15	Power supply for speed setting		+15V (Internal power supply 20 mA max.)
16	Multifunction analog input: one of the following signals available to select. Frequency command, frequency gain, frequency bias, overtorque detection level, voltage bias, accel/decel rate, DB current.		0 to +10 V/100% (20kΩ)
17	Common terminal for control circuit		0 V
18	Fault contact output IC (Closed at fault)		Contact capacity: 250 VAC 1 A or less 30 VDC 1A or less
19	Fault contact output b (Open at fault)		
20	Fault contact output C (Common)		
21	Multifunction analog monitor (+)	Output current or output frequency is selectable.	Monitor output: 0 to +11V
22	Multifunction analog monitor common (–)		
25	Multifunction PHC output 1	The same as terminals 9 and 10	Photo-coupler insulation output: 48 V, 50 mA or less
26	Multifunction PHC output 2		
27	Multifunction PHC output common		

5-3 SYSDRIVE 3G3IV V/F Pattern Selection

	Specifications		Sn-02	V/f Pattern*
General-purpose	50 Hz		(0)	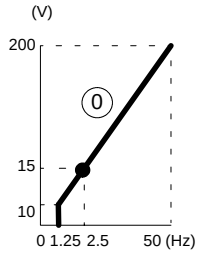
	60 Hz	60 Hz Saturation	(1), (F)	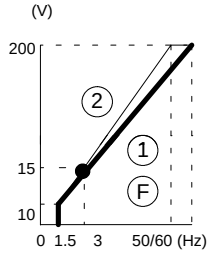
		50 Hz Saturation	(2)	
	72 Hz		(3)	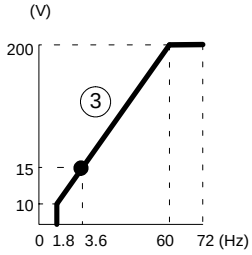
Decreased Torque Characteristics	50 Hz	Cube decreased torque	(4)	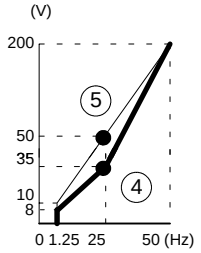
		Square decreased torque	(5)	
	60 Hz	Cube decreased torque	(6)	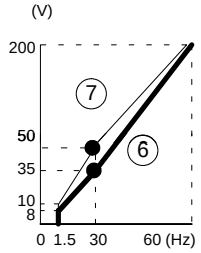
		Square decreased torque	(7)	

	Specifications		Sn-02	V/f Pattern*
High Starting Torque**	50 Hz	Small starting torque	(8)	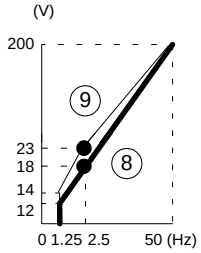
		Large starting torque	(9)	
	60 Hz	Small starting torque	(A)	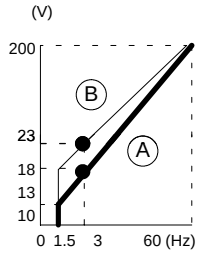
		Large starting torque	(B)	
Rated Output Operation (machine tool)	90 Hz		(C)	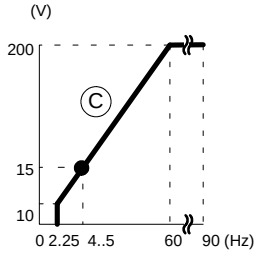
	120 Hz		(D)	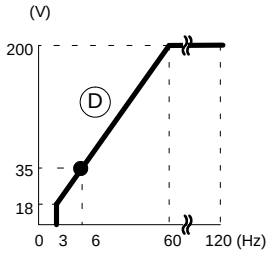
	180 Hz		(E)	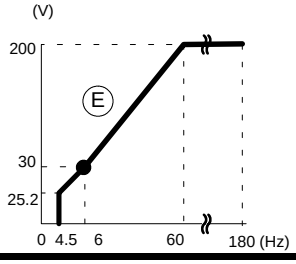

SECTION 6
Interconnection

Using diagrams, this section illustrates the interconnections required for various SYSDRIVE 3G3IV models.

6-1 Models 3G3IV-A2004-□ to A2075-□

For 200 V class, 13.7 kVA and below.

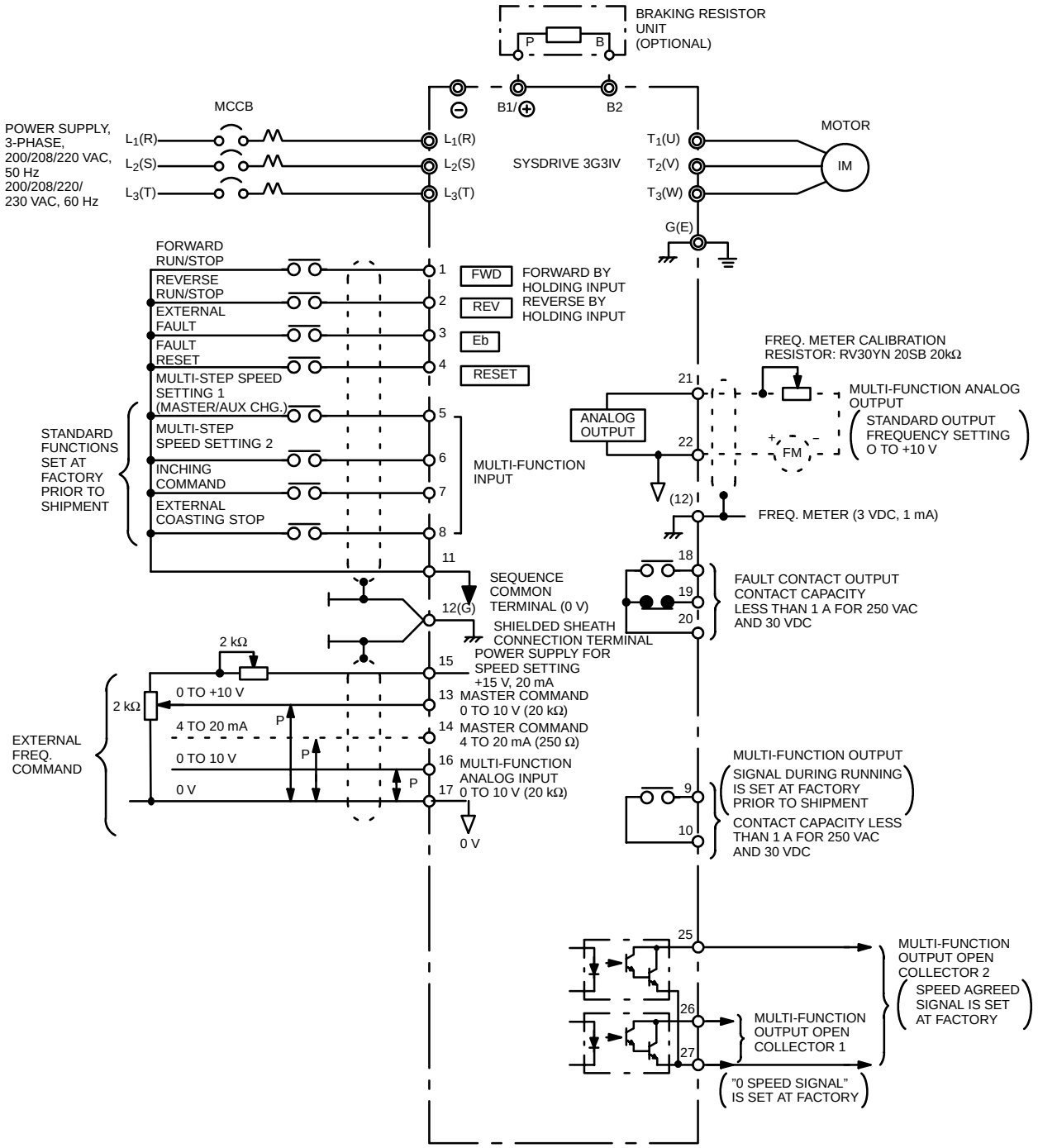

Note 1. indicates shielded leads and twisted-pair shielded leads.

2. External terminal 15 of +15 V has maximum output current capacity of 20 mA.
3. Either external terminal 13 or 14 can be used.
4. Terminal symbols: ◎ shows main circuit; ○ shows control circuit.

6-2 Models 3G3IV-B2110-□ to B2220-□

For 200 V class, 20.6 kVA and 41 kVA.

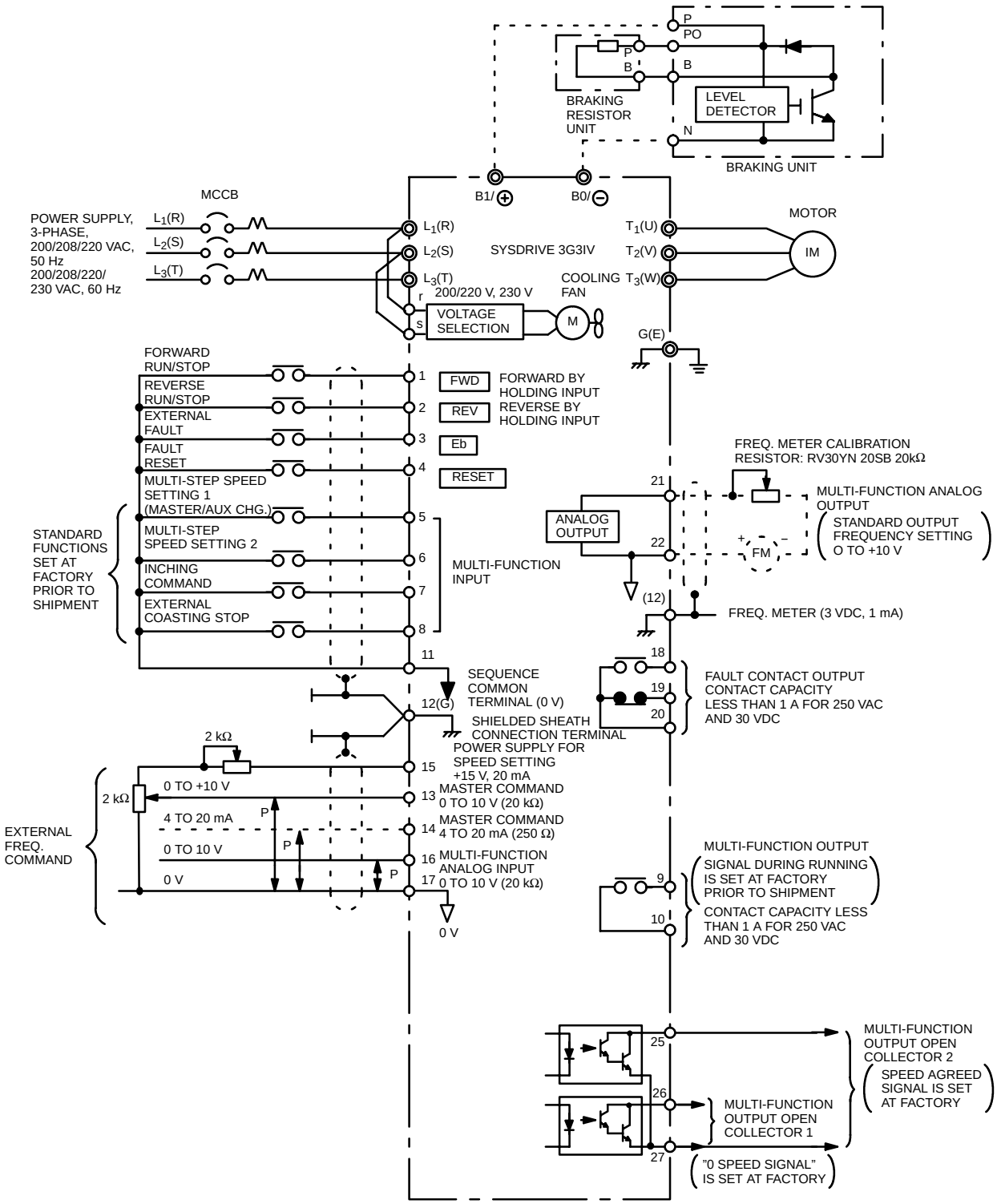

Note See notes on page 38.

6-3 Models 3G3IV-B2300-□ to B2750-□

For 200 V class, 54 kVA and above.

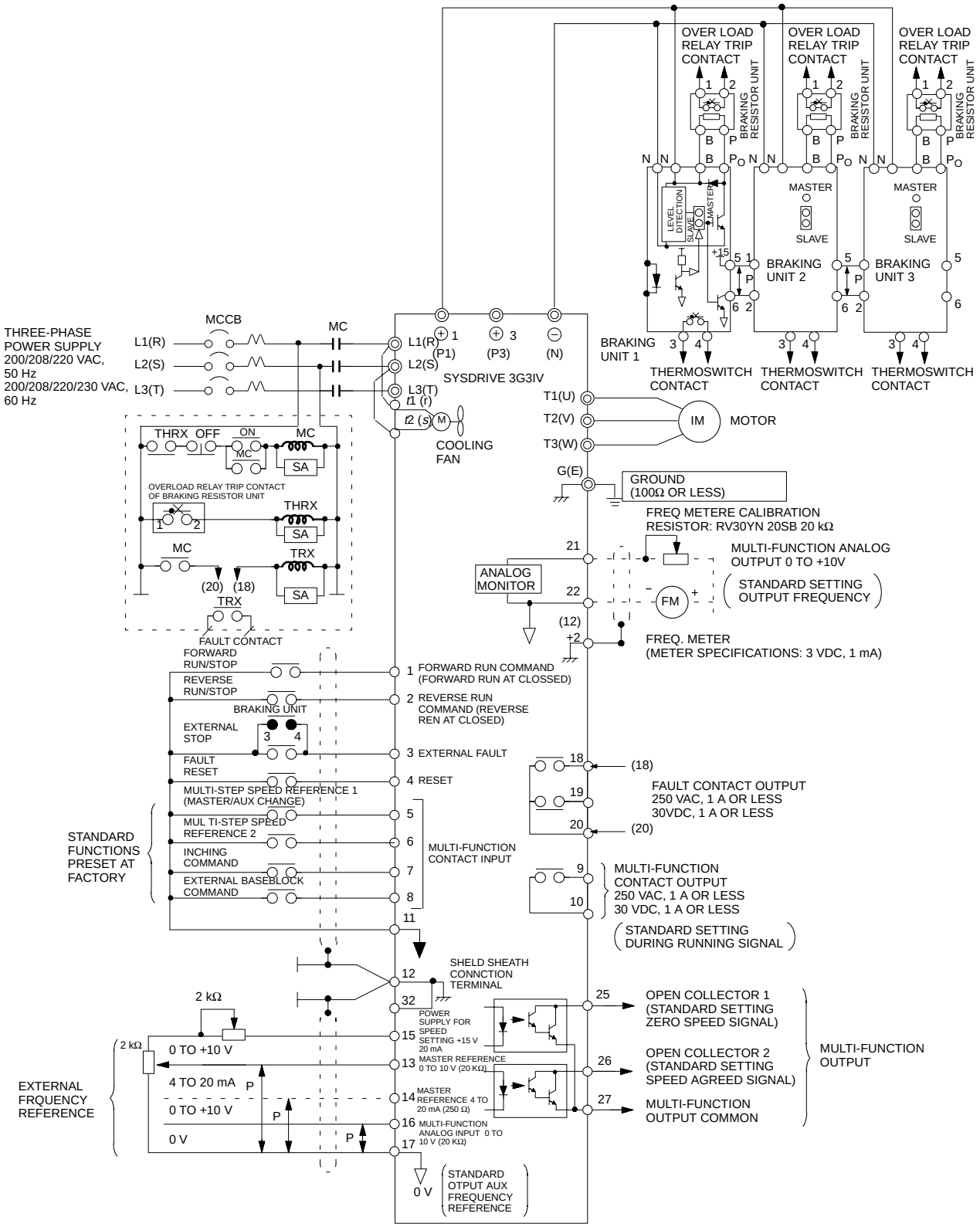

Note See notes on page 38.

6-4 Models 3G3IV-A4004-□ to A4075-□

For 400 V class, 13.7 kVA and below.

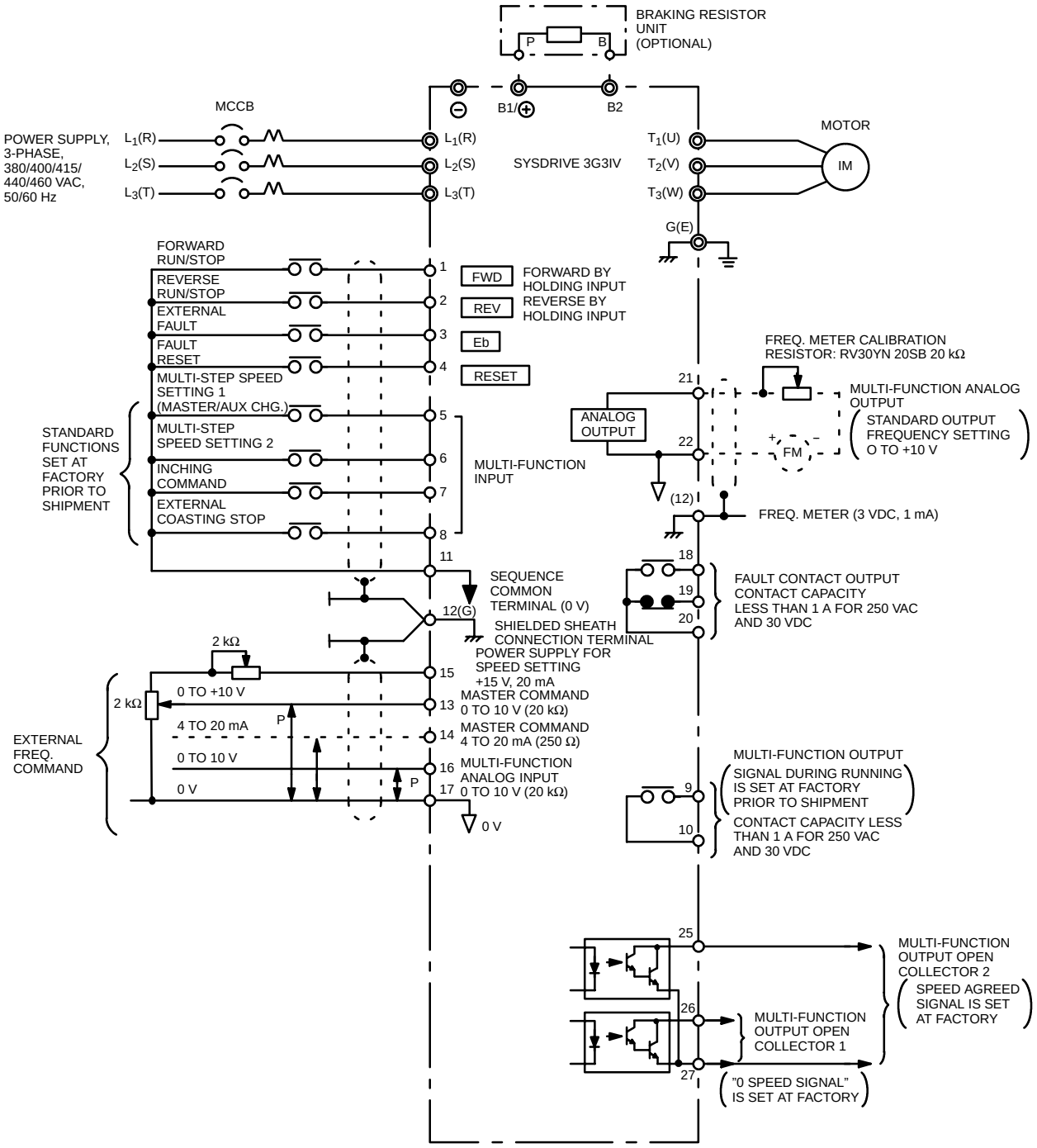

Note See notes on page 38.

6-5 Models 3G3IV-B4110-□ to B4150-□

For 400 V class, 20.6 kVA and 27.4 kVA.

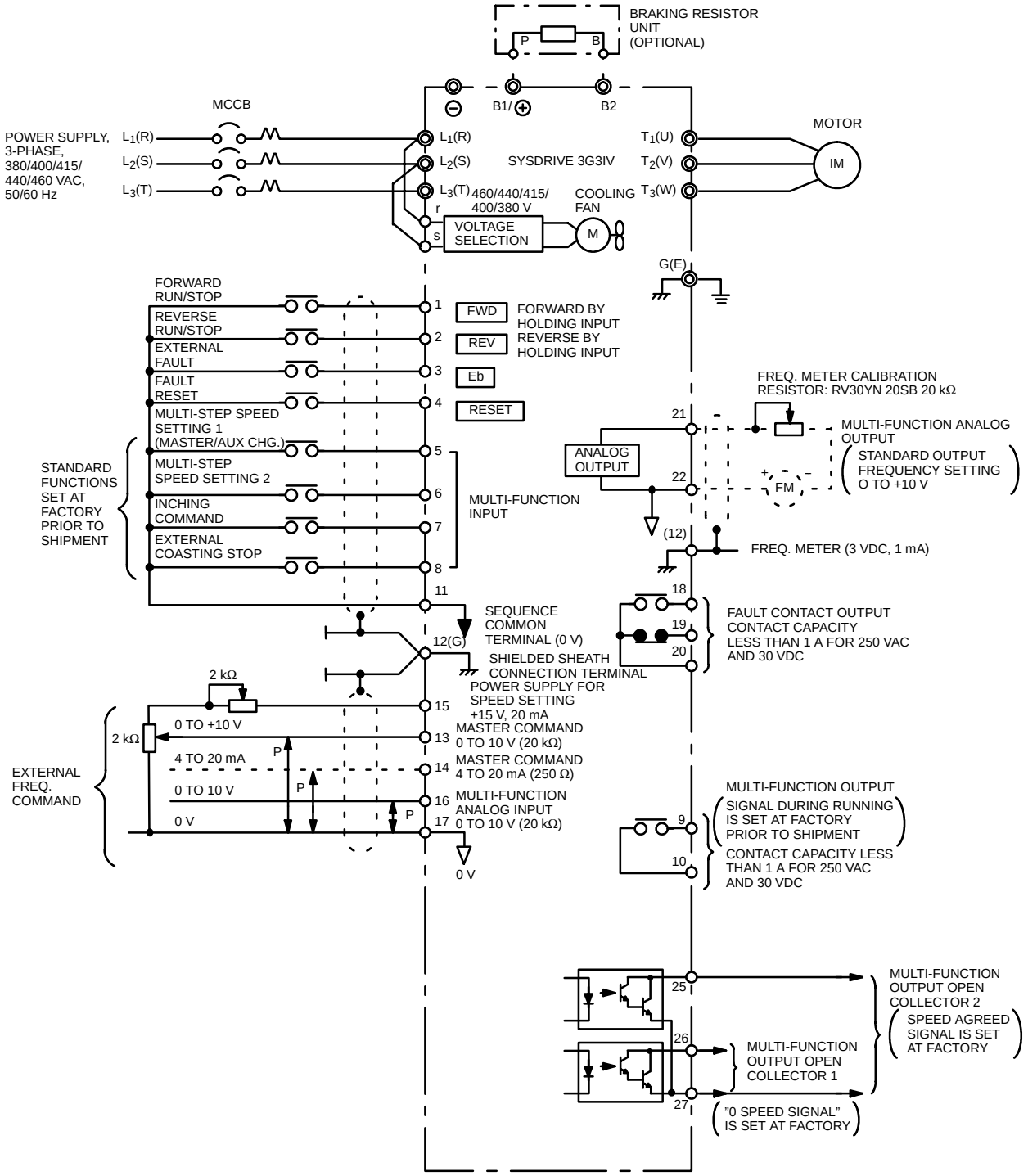

Note See notes on page 38.

6-6 Models 3G3IV-B4185-□ to B4450-□

For 400 V class, 34 kVA and 82 kVA.

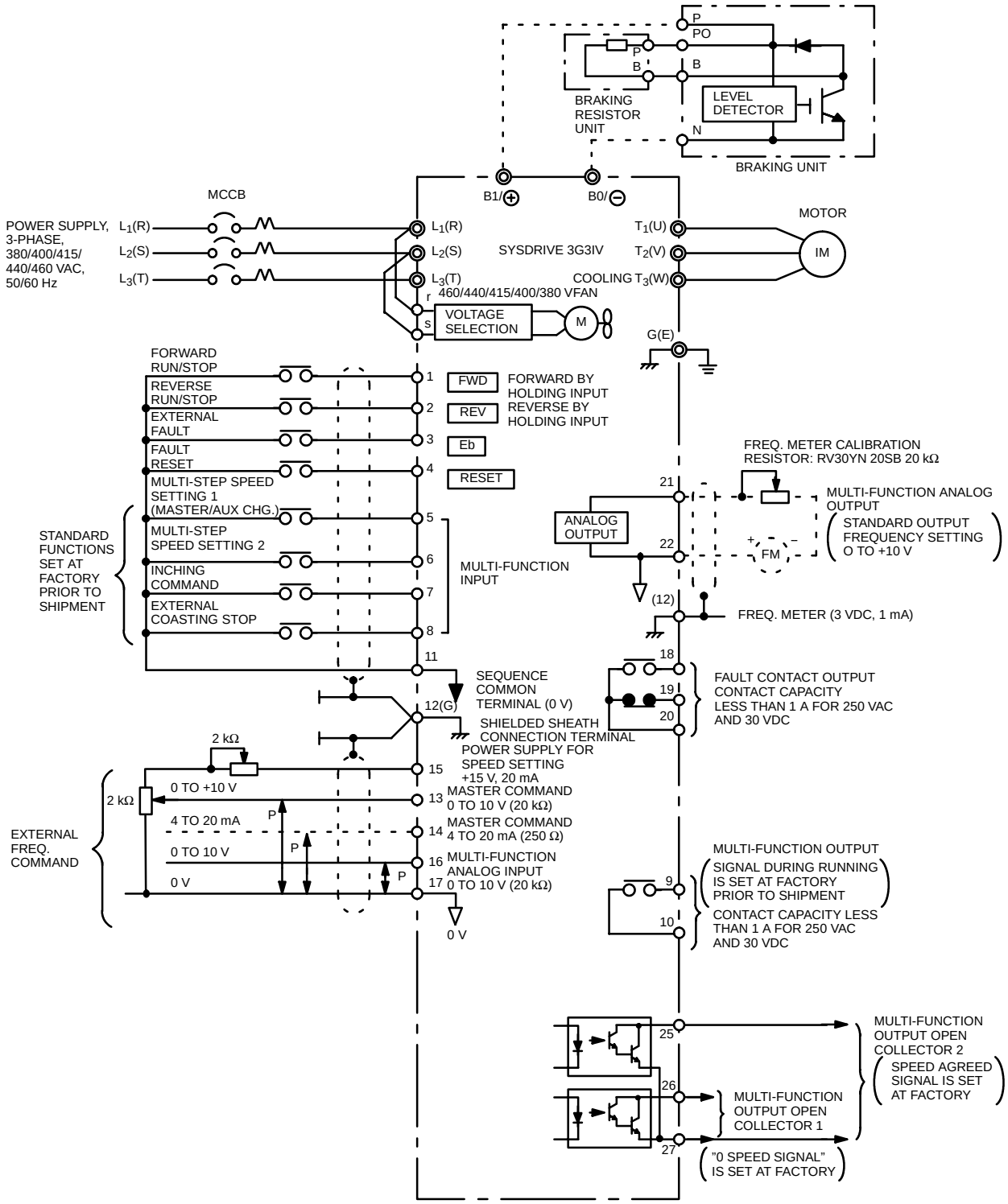

Note See notes on page 38.

6-7 Models 3G3IV-B4550-□ to B416K-□

For 400 V class, 110 kVA and 300 kVA.

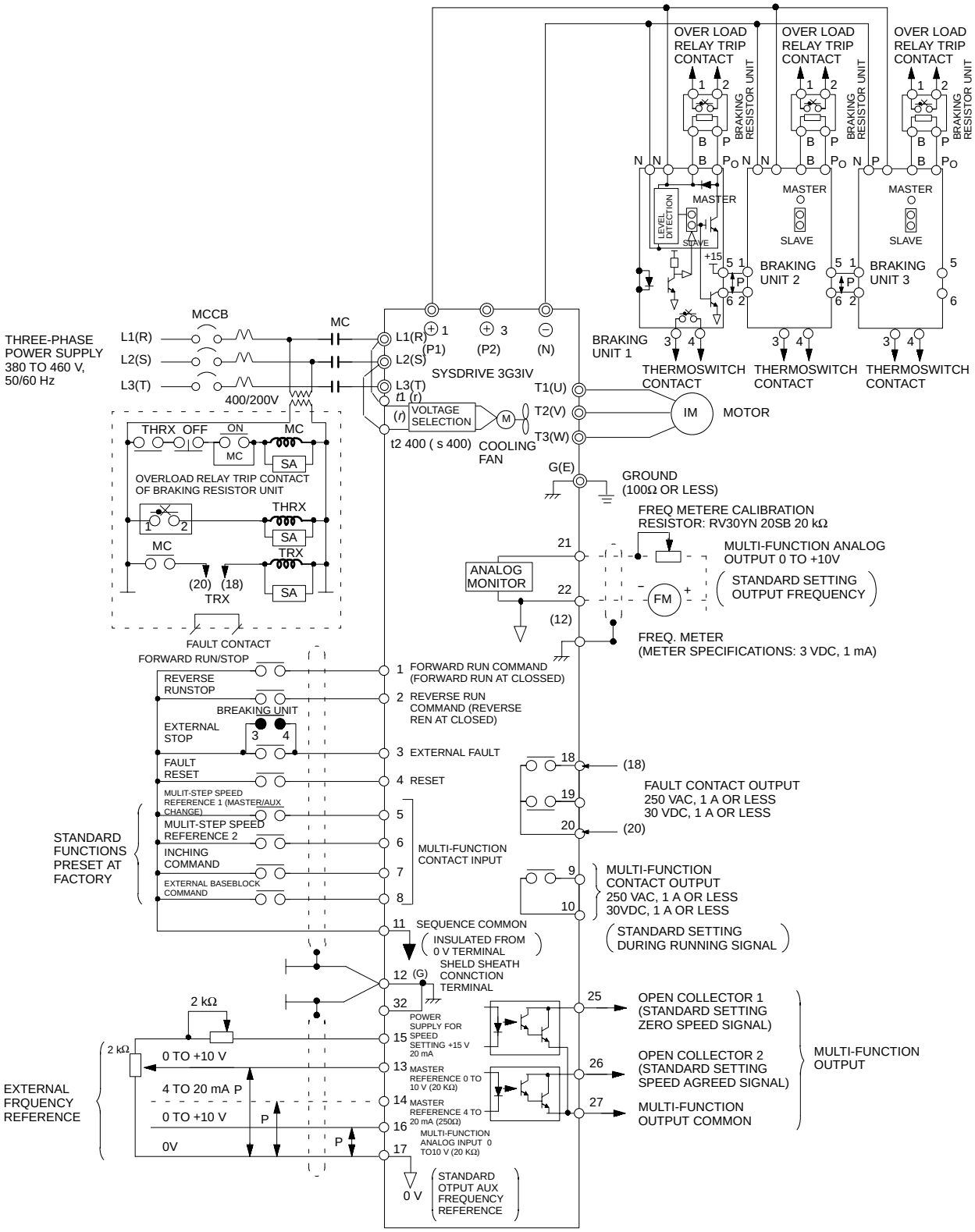

Note See notes on page 38.

6-8 Backup Capacitor for Momentary Power Loss

For 400 V class, 110 kVA and 300 kVA.

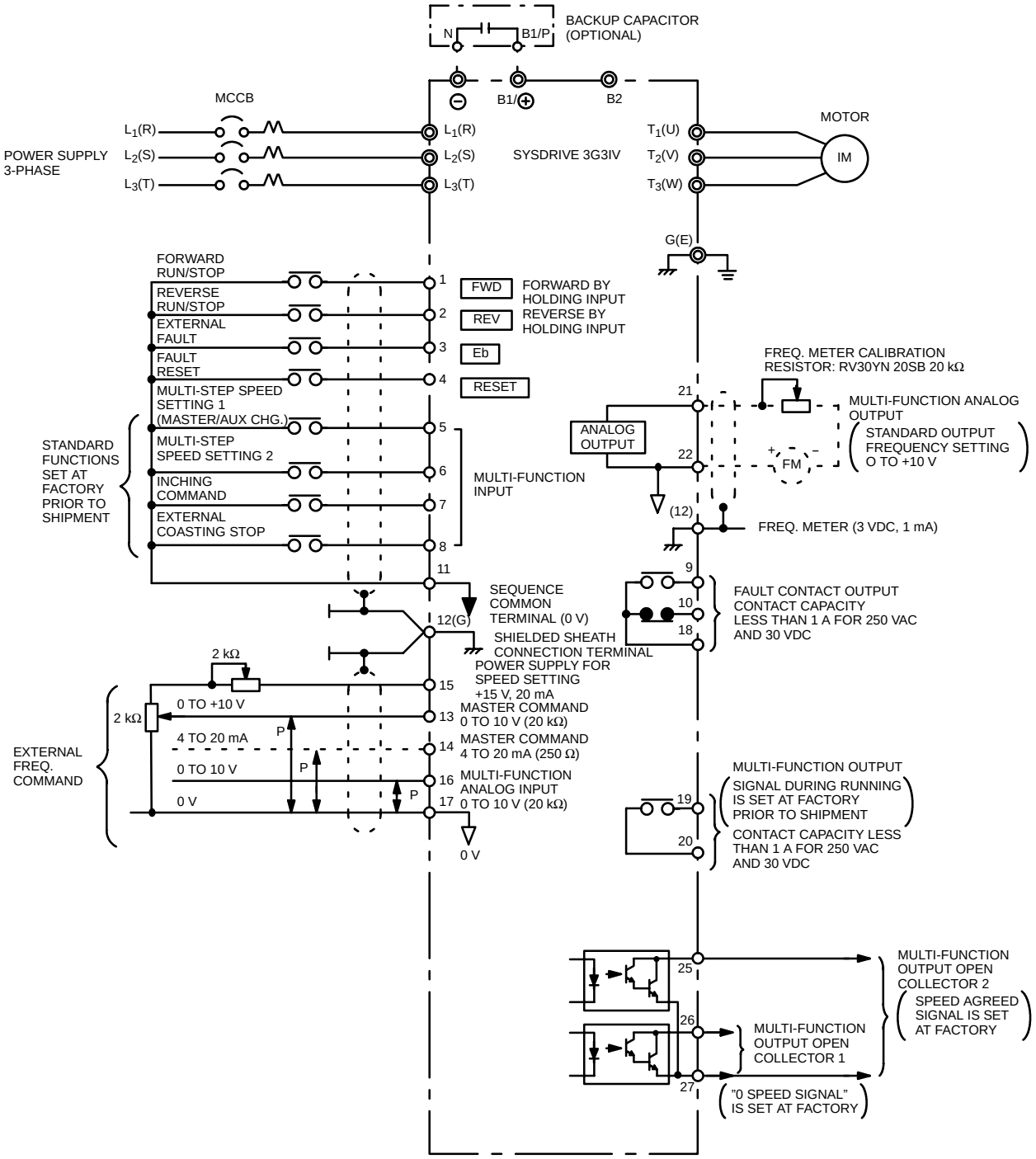

Note See notes on page 38.

6-9 Transistor (Open Collector)

System Constant No.	Data			
	4th digit	3rd digit	2nd digit	1st digit
sn-04	---	---	0	0

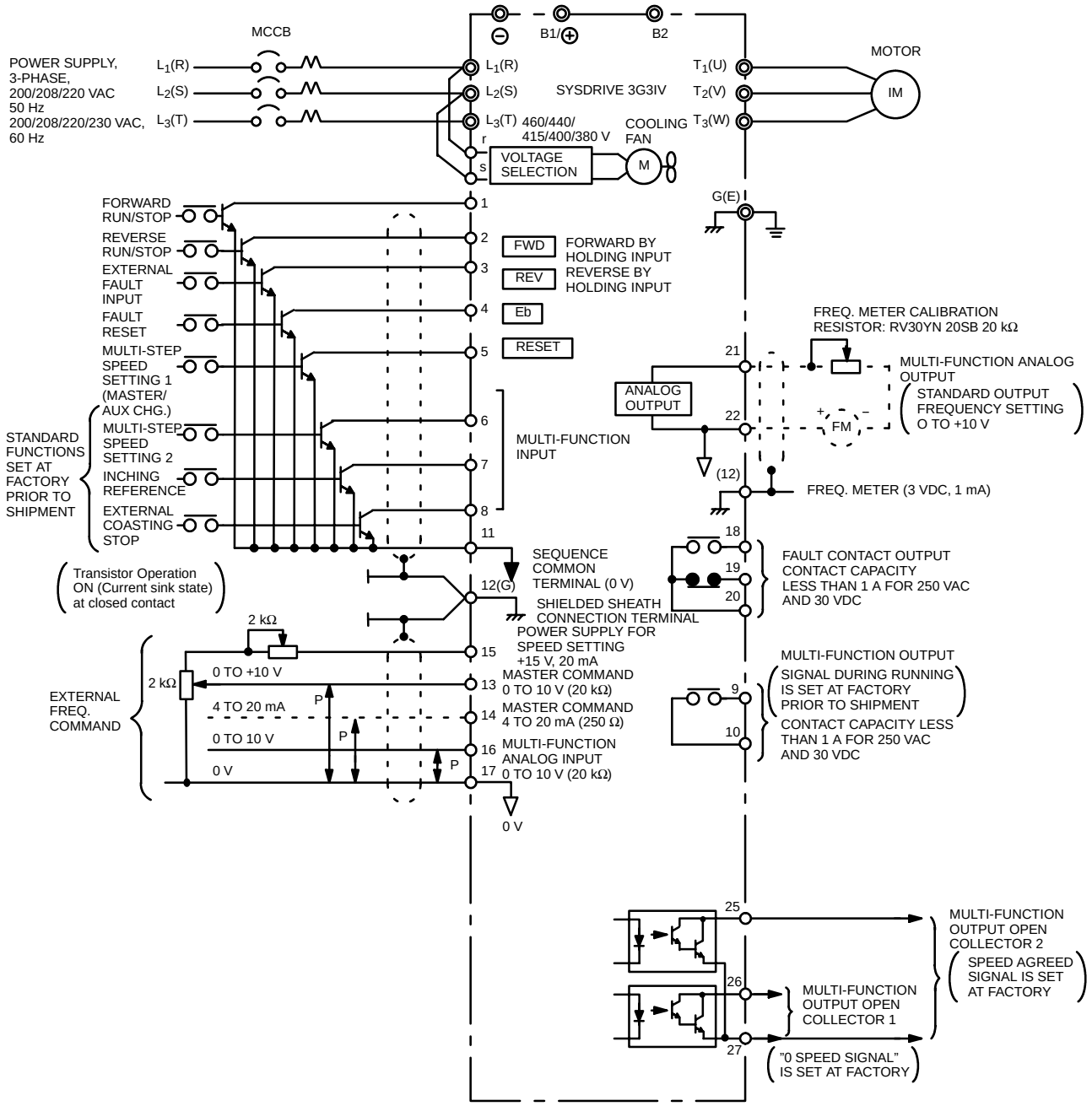

Note 1. See notes on page 38.

2. Use the transistor open collector with withstand voltage 35 VDC and above, rated current 100 mA and above.

6-10 Contact Output, Photo-coupler Output

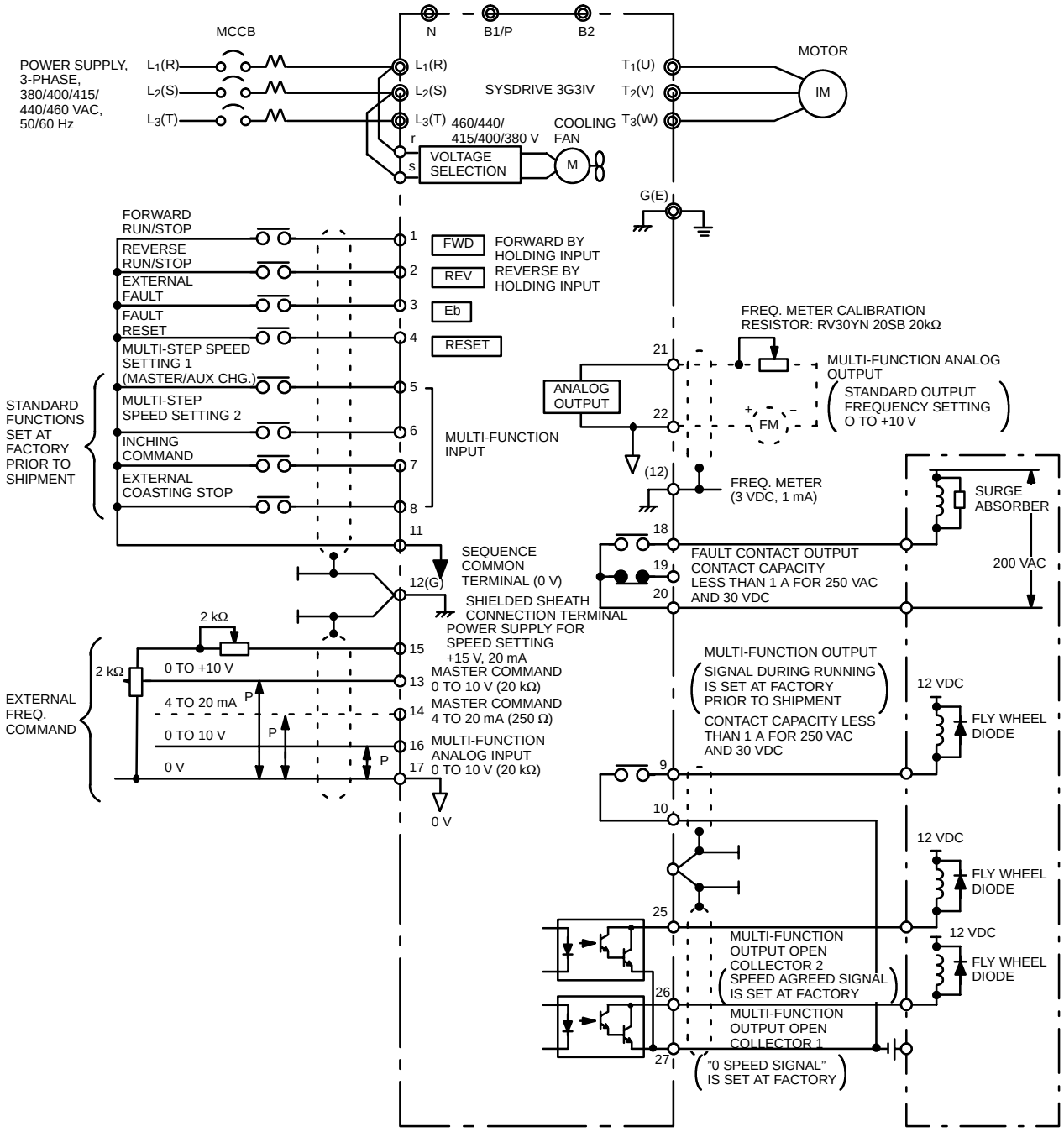

Note See notes on page 38.

6-11 Run/Stop by Main Circuit Magnetic Contactor for Models 3G3IV-B2300

System Constant No.	Data			
	4th digit	3rd digit	2nd digit	1st digit
sn-04	---	1	0	1 *
sn-11	---	1	---	---

*Frequency reference setting
0: Set by frequency setting resistor
1: Digital operator set value (An-01)

For 230 V class, 40 Hp, 300 kW.
Turn on the power supply after checking that the motor has stopped. This circuit cannot be used for an application with frequent run-stop (repeating frequency: within 1 hour).

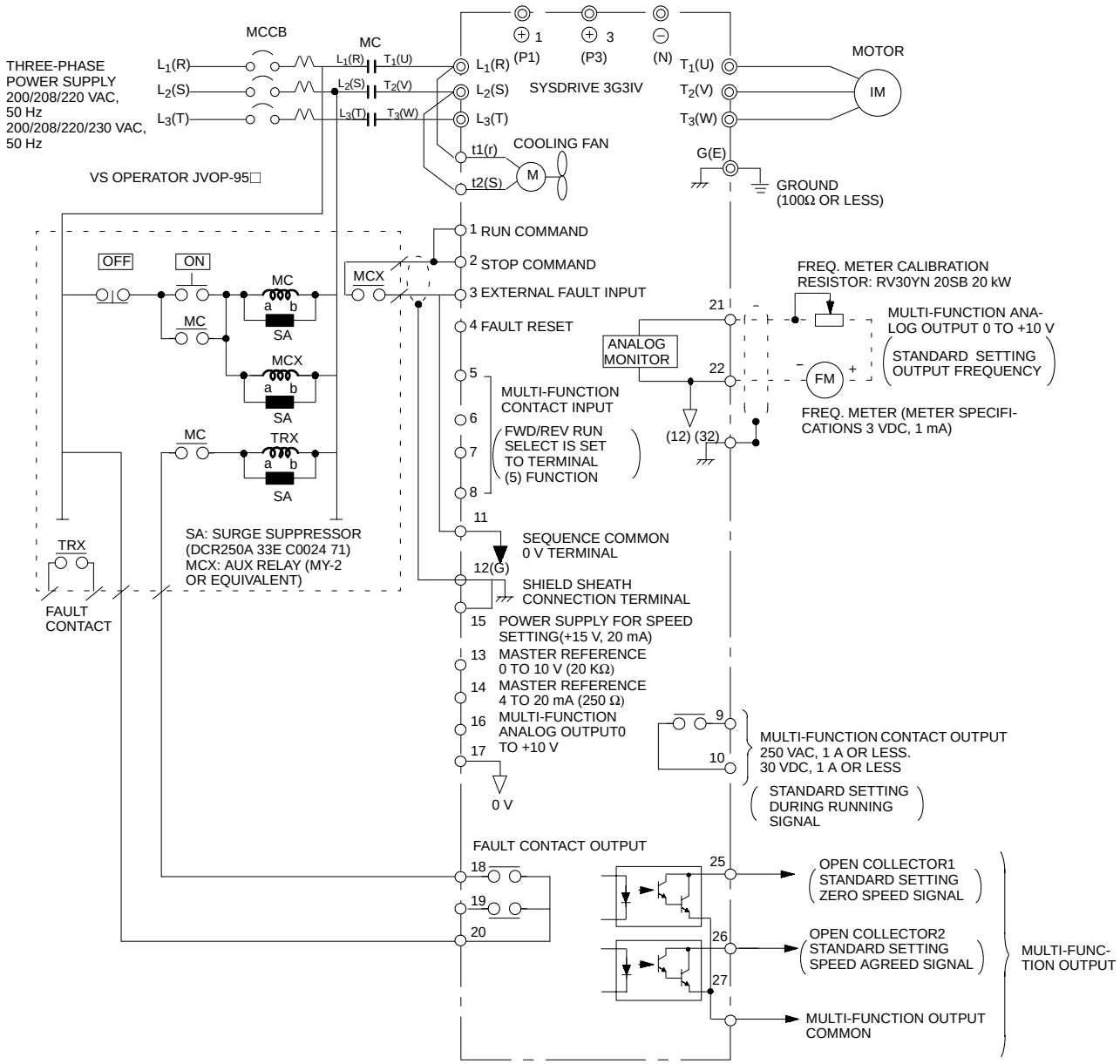

Note 1. See notes on page 38.
2. Braking is not activated at deceleration stop. It coasts to a stop.
3. Use MC or MCX of delay release type for restart operation after momentary power loss.
4. Frequency setting resistor is not required for the use of digital operator's set value as frequency reference.

6-12 With VS Operator Models 3G3IV PJVOP95□

System Constant No.	Data			
	4th digit	3rd digit	2nd digit	1st digit
sn-04	---	---	0	0
sn-05	0	---	0	---
sn-15	---	---	0	3
sn-19	---	---	0	0*
sn-20	---	---	0	0

*Connect to control circuit terminal 13 or 16 according to the application. For terminal 16, set Sn-19 = xx00.

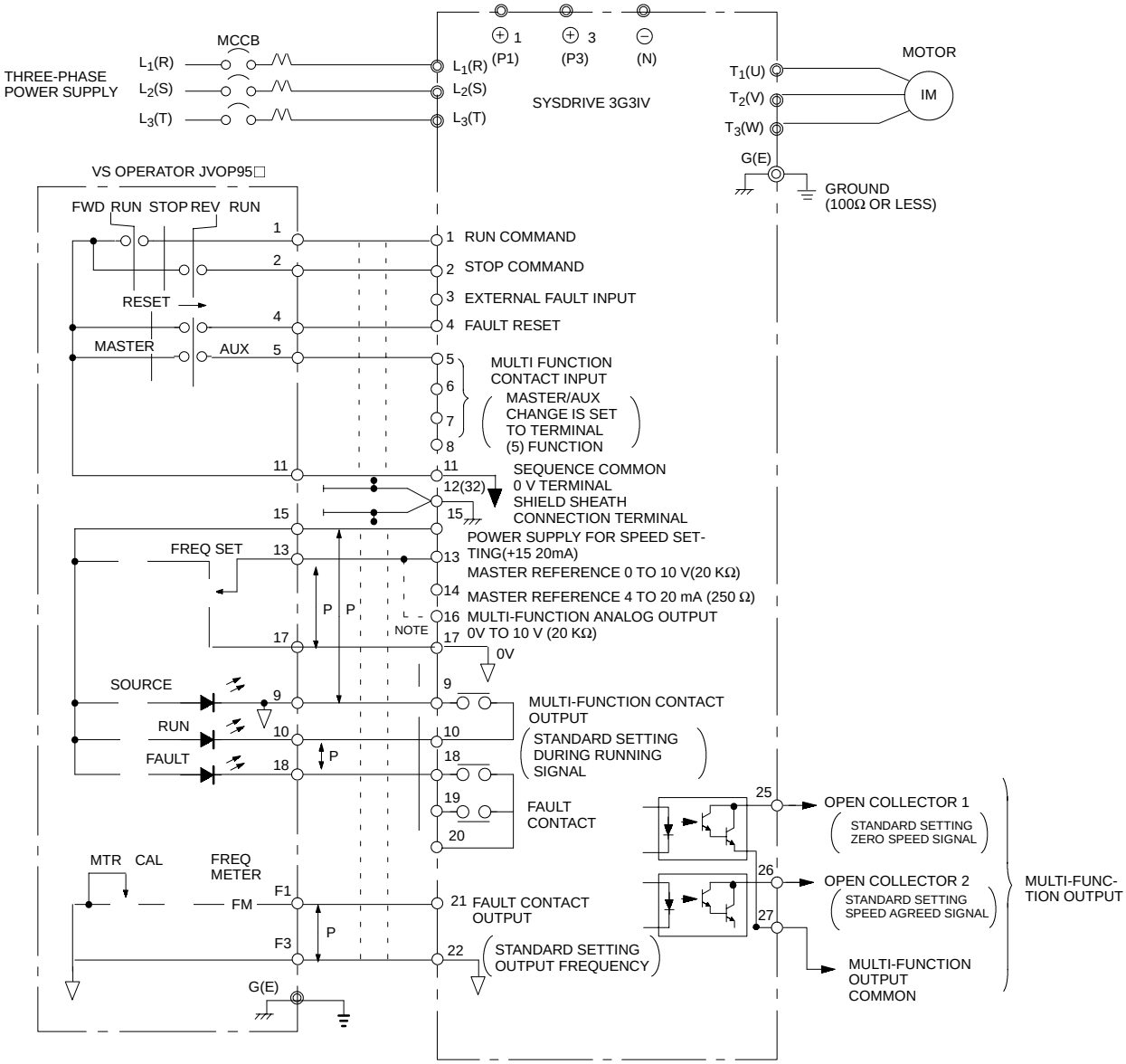

Note See notes on page 38.

6-13 With VS Operator Models 3G3IV-PJVOP96-□

System Constant No.	Data			
	4th digit	3rd digit	2nd digit	1st digit
sn-04	---	---	0	0
sn-05	0	---	0	---
sn-15	---	---	0	3
sn-19	---	---	0	0*
sn-20	---	---	0	0

*Connect to control circuit terminal 13 or 16 according to the application. For terminal 16, set Sn-19 = xx00.

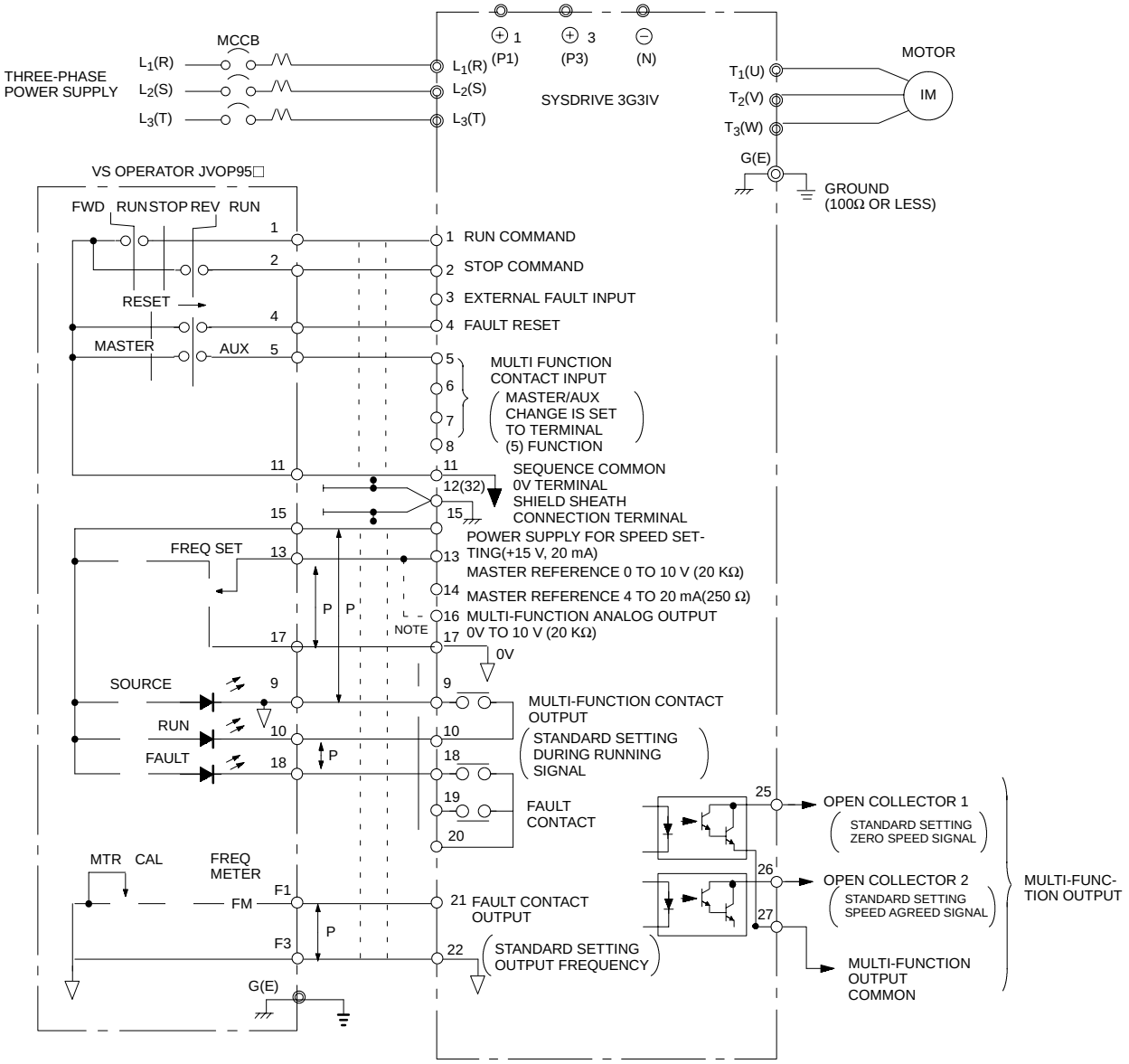

Note See notes on page 38.

Appendix A
Constants and Specifications

The constants described here are those required for basic operation.

un–□□ (Monitor Type)

No.	Item	Display	Unit
un–01	Frequency reference	120.00	Hz
un–02	Output frequency	120.00	Hz
un–03	Output current	4.8a	A
un–04	Voltage reference	200u	V
un–05	DC voltage (V.P-N)	pn270	V
un–06	Output power ("–" displayed at regeneration)	0.75	kW

an–□□ (Frequency Setting)

No.	Item	Display	Unit
an–01	Master frequency	120.00	Hz
an–09	Inching frequency	6.00	Hz

bn–□□ (Constant to be Changed during Operation)

No.	Item	Display	Unit
bn–01	Acceleration time	10.0	sec
bn–02	Deceleration time	10.0	sec
bn–11	Frequency meter output gain	100	%

sn–□□ (Operation Conditions Setting at Stopping)

No.	Operation conditions		Data (digits)				Setting prior to shipment
			1	2	3	4	
sn–04	Run Mode	Master frequency reference: External terminal 13, 14 input	---	---	---	0	0011
		Master frequency reference: Digital operator (an–01)	---	---	---	1	
		Operated by external terminal run command.	---	---	0	---	
		Operated by run command from the digital operator.	---	---	0	---	
	Stop Mode	Frequency deceleration to stop	0	0	---	---	
		Coasting to stop	0	1	---	---	
		Full range DC injection braking to stoop	1	0	---	---	
		Coasting to stop (restart possible after the time set in bn–02)	1	1	---	---	

cn–□□ (Constant Setting at Stopping)

No.	Item	Display	Unit
cn–09	Motor rated current (to agree to motor NP)	3.3	A
cn–11	DC injection braking current	50	%
cn–12	DC injection braking time at stopping	0.5	sec
cn–14	Frequency reference (upper limit)	100	%
cn–15	Frequency reference (lower limit)	12	%
cn–36	No. of retry operations at fault	5	times

Specifications

Models A2004 to A2075

Inverter model 3G3IV-□□□□□-□		200 to 230 V						
		A2004	A2007	A2015	A2022	A2037	A2055	A2075
Max. applicable motor output Hp (kW) (See Note 1)		0.5 (0.4)	1 (0.75)	2 (1.5)	3 (2.2)	5 (3.7)	7.5 (5.5)	10 (7.5)
Output characteristics	Inverter capacity kVA	1.4	2.1	2.7	4.1	6.9	10.3	13.7
	Rated output current A	3.2	4.8	6.4	9.6	16	24	32
	Max. continuous output current (See Note 2) A	3.6	5.4	7.2	10.8	18	27	36
	Max. output voltage	3-phase, 200/208/220/230 V (Proportional to input voltage)						
	Rated output frequency	50, 60, 72, 90, 120, 180 Hz (up to 400 Hz available)						
Power supply	Rated input voltage and frequency	3-Phase: 200/208/220 V, 50 Hz, 200/208/220/230 V, 60 Hz						
	Allowable voltage fluctuation	±10%						
	Allowable frequency fluctuation	±5%						
Control characteristics	Control method	Sine wave PWM						
	Frequency control range	0.1 to 400 Hz						
	Frequency accuracy	Digital command: 0.01%, +14° to 104°F, –10° to 40°C Analog command: 0.1%, 77° ±18°F, 25° ±10°C						
	Frequency resolution	Digital operator reference: 0.1 Hz Analog reference: 0.06 Hz/60 Hz						
	Output frequency resolution	0.01 Hz (1/30000)						
	Overload capacity	150% rated output current for one minute						
	Frequency setting signal	0 to 10 VDC (20 kΩ), 4 to 20 mA (250 Ω) 0 ±10 V (OPTIONAL)						
	Accel/Decel time	0.1 to 6000 sec. (Accel/Decel time setting independently)						
	Braking torque	Approx. 20%						
	No. of V-f patterns (Total of 16)	4: For general purpose 4: For high starting torque: 1: For adjustable pattern 4: For fans and pumps 3: For machine tools.						
Protective functions	Motor overload protection	Electric thermal overload relay						
	Instantaneous overcurrent	Motor coasts to a stop at approx. 200% rated current.						
	Fuse blown protection	Motor coasts to a stop by blown-fuse.						
	Overload	Motor coasts to a stop for 1 minute at 150% rated output current.						
	Overvoltage	Motor coasts to a stop if converter output voltage exceeds 400 V.						
	Undervoltage	Motor coasts to a stop if converter output voltage drops to 210 V or below (See Note 3).						
	Momentary power loss	Immediately stop by 15 ms and above momentary power loss. (Continuous system operation during power loss less than 2 sec is equipped as standard. See Note 2.) Setting made before shipment.						
	Fin overheat	Thermostat						

Inverter model 3G3IV-□□□□□-□		200 to 230 V						
		A2004	A2007	A2015	A2022	A2037	A2055	A2075
Protective functions	Stall prevention	Stall prevention at acceleration/deceleration and constant speed operation						
	Ground fault	Provided by electronic circuit						
	Power charge indication	Charge lamp stays ON until bus voltage drops below 50 V.						
Environmental conditions	Location	Indoor (protected from corrosive gases and dust)						
	Ambient temperature	+4° to 104°F (–10° to +40°C) (not frozen)						
	Storage temperature (See Note 4)	–4° to 140°F (–20° to +60°C)						
	Humidity	90% RH (non-condensing)						
	Vibration	1 G less than 20 Hz, up to 0.2 G at 20 to 50 Hz						

Note
1. Our standard 4-pole motor is used for max applicable motor output.
2. Allowable values for the applications not required overload.
3. For Models of 4.1 kVA or less, continuous system operation during power loss less than 1 sec, for models with capacitor (option), less than 2 seconds.
4. Temperature during shipping (for short period).

Models B2110 to B2220

Inverter model 3G3IV-□□□□□-□		200 to 230 V			
		B2110	B2150	B2185	B2220
Max. applicable motor output Hp (kW) (See Note 1)		15 (11)	20 (15)	25 (18.5)	30 (22)
Output characteristics	Inverter capacity kVA	20.6	27.4	34	41
	Rated output current A	48	64	80	96
	Max. continuous output current (See Note 2) A	54	72	90	108
	Max. output voltage	3-phase, 200/208/220/230 V (Proportional to input voltage)			
	Rated output frequency	50, 60, 72, 90, 120, 180 Hz (up to 400 Hz available)			
Power supply	Rated input voltage and frequency	3-Phase: 200/208/220 V, 50 Hz, 200/208/220/230 V, 60 Hz			
	Allowable voltage fluctuation	+10%			
	Allowable frequency fluctuation	+5%			
Control characteristics	Control method	Sine wave PWM			
	Frequency control range	0.1 to 400 Hz			
	Frequency accuracy	Digital command: 0.01%, +14° to 104°F, –10° to 40°C Analog command: 0.1%, 77° ±18°F, 25° ±10°C			
	Frequency resolution	Digital operator reference: 0.1 Hz Analog reference: 0.06 Hz/60 Hz			
	Output frequency resolution	0.01 Hz (1/30000)			
	Overload capacity	150% rated output current for one minute			
	Frequency setting signal	0 to 10 VDC (20 kΩ), 4 to 20 mA (250 Ω) 0 ±10 V (OPTIONAL)			
	Accel/Decel time	0.1 to 6000 sec. (Accel/Decel time setting independently)			
	Braking torque	Approx. 20%			

Inverter model 3G3IV-□□□□□-□		200 to 230 V			
		B2110	B2150	B2185	B2220
Control characteristics	No. of V-f patterns (Total of 16)	4: For general purpose 4: For high starting torque: 1: For adjustable pattern 4: For fans and pumps 3: For machine tools.			
Protective functions	Motor overload protection	Electric thermal overload relay			
	Instantaneous overcurrent	Motor coasts to a stop at approx. 200% rated current.			
	Fuse blown protection	Motor coasts to a stop by blown-fuse.			
	Overload	Motor coasts to a stop for 1 minute at 150% rated output current.			
	Overvoltage	Motor coasts to a stop if converter output voltage exceeds 400 V.			
	Undervoltage	Motor coasts to a stop if converter output voltage drops to 210 V or below (See Note 3).			
	Momentary power loss	Immediately stop by 15 ms and above momentary power loss. (Continuous system operation during power loss less than 2 sec is equipped as standard. See Note 2.) Setting made before shipment.			
	Fin overheat	Thermostat			
	Stall prevention	Stall prevention at acceleration/deceleration and constant speed operation			
	Ground fault	Provided by electronic circuit			
	Power charge indication	Charge lamp stays ON until bus voltage drops below 50 V.			
Environmental conditions	Location	Indoor (protected from corrosive gases and dust)			
	Ambient temperature	+4° to 104°F (–10° to +40°C) (not frozen)			
	Storage temperature (See Note 4)	–4° to 140°F (–20° to +60°C)			
	Humidity	90% RH (non-condensing)			
	Vibration	1 G less than 20 Hz, up to 0.2 G at 20 to 50 Hz			

Note
1. Our standard 4-pole motor is used for max applicable motor output.
2. Allowable values for the applications not required overload.
3. For Models of 4.1 kVA or less, continuous system operation during power loss less than 1 sec, for models with capacitor (option), less than 2 seconds.
4. Temperature during shipping (for short period).

Models B2300 to B2750

Inverter model 3G3IV-□□□□□-□		200 to 230 V				
		B2300	B2370	B2450	B2550	B2750
Max. applicable motor output Hp (kW) (See Note 1)	Rated output	40 (30)	50 (37)	60 (45)	75 (55)	100 (75)
	Max. continuous output	50 (37)	60 (45)	75 (55)	100 (75)	125 (90)
Output characteristics	Inverter capacity kVA	54	68	78	95	130
	Rated output current A	130	160	183	224	300
	Max. continuous output current (See Note 2) A	146	180	205	252	337
	Max. output voltage	3-phase, 200/208/220/230 V (Proportional to input voltage)				
	Rated output frequency	50, 60, 72, 90, 120, 180 Hz (up to 400 Hz available)				

Inverter model 3G3IV-□□□□□-□		200 to 230 V				
		B2300	B2370	B2450	B2550	B2750
Power supply	Rated input voltage and frequency	3-Phase: 200/208/220 V, 50 Hz, 200/208/220/230 V, 60 Hz				
	Allowable voltage fluctuation	±10%				
	Allowable frequency fluctuation	±5%				
Control characteristics	Control method	Sine wave PWM				
	Frequency control range	0.1 to 400 Hz				
	Frequency accuracy	Digital command: 0.01%, +14° to 104°F, –10° to 40°C Analog command: 0.1%, 77° ±18°F, 25° ±10°C				
	Frequency resolution	Digital operator reference: 0.1 Hz Analog reference: 0.06 Hz/60 Hz				
	Output frequency resolution	0.01 Hz (1/30000)				
	Overload capacity	150% rated output current for one minute/ 110% max. continuous output current for 1 minute				
	Frequency setting signal	0 to 10 VDC (20 kΩ), 4 to 20 mA (250 Ω), 0 ±10 V (OPTIONAL)				
	Accel/Decel time	0.1 to 6000 sec. (Accel/Decel time setting independently)				
	Braking torque	Approx. 20%				
	No. of V-f patterns (Total of 16)	4: For general purpose 4: For high starting torque: 4: For fans and pumps 3: For machine tools.				
Protective functions	Motor overload protection	Electric thermal overload relay				
	Instantaneous overcurrent	Motor coasts to a stop at approx. 200% rated current.				
	Fuse blown protection	Motor coasts to a stop by blown-fuse.				
	Overload	Motor coasts to a stop for 1 minute at 150% rated output current/motor coasts to a stop for 1 minute at 110% max. continuous output current.				
	Overvoltage	Motor coasts to a stop if converter output voltage exceeds 400 V.				
	Undervoltage	Motor coasts to a stop if converter output voltage drops to 210 V or below.				
	Momentary power loss	Immediately stop by 15 ms and above momentary power loss. (Continuous system operation during power loss less than 2 sec is equipped as standard.) Setting made before shipment.				
	Fin overheat	Thermostat				
	Stall prevention	Stall prevention at acceleration/deceleration and constant speed operation				
	Ground fault	Provided by electronic circuit				
	Power charge indication	Charge lamp stays ON until bus voltage drops below 50 V.				
Environmental conditions	Location	Indoor (protected from corrosive gases and dust)				
	Ambient temperature	Enclosed type, totally-enclosed type: +14° to 104°F (–10° to +40°C) Open chassis type: +14° to 122°F (–10° to +50°C) (not frozen) (see note 3)				
	Storage temperature (See Note 4)	–4° to 140°F (–20° to +60°C)				
	Humidity	90% RH (non-condensing)				

Inverter model 3G3IV-□□□□□-□		200 to 230 V				
		B2300	B2370	B2450	B2550	B2750
Environmental conditions	Vibration	9.81 m/s^2 1 G less than 20 Hz, up to 0.2 G at 20 to 50 Hz				

Note 1. Our standard 4-pole motor is used for max applicable motor output.
2. Application of variable torque rating requires adjustment of 4th digit of Sn-14: from 0 to 1 (0□□□ to 1□□□)
3. Up to 122°F (50°C) allowed when front cover is removed (open chassis type).
4. Temperature during shipping (for short period).

Models A4004 to A4075

Inverter Model 3G3IV-□□□□□-□		380 to 460 V						
		A4004	A4007	A4015	A4022	A4037	A4055	A4075
Max. applicable motor output Hp (kW) (See Note 1)		0.5 (0.4)	1 (0.75)	2 (1.5)	3 (2.2)	5 (3.7)	7.5 (5.5)	10 (7.5)
Output characteristics	Inverter capacity kVA	1.4	2.2	3.4	4.1	6.9	10.3	13.7
	Rated output current A	1.6	2.6	4.0	4.8	8	12	16
	Max. continuous output current (See Note 2) A	1.8	2.9	4.5	5.4	9	13.5	18
	Max. output voltage	3-Phase, 380/400/415/440/460 V (Proportional to input voltage)						
	Rated output frequency	50, 60, 72, 90, 120, 180 Hz (up to 400 Hz available)						
Power supply	Rated input voltage and frequency	3-Phase: 380/400/415/440/460 V, 50/60 Hz						
	Allowable voltage fluctuation	±10%						
	Allowable frequency fluctuation	±5%						
Control characteristics	Control method	Sine wave PWM						
	Frequency control range	0.1 to 400 Hz						
	Frequency accuracy	Digital command: 0.01%, +14° to 104°F, −10° to 40°C Analog command: 0.1%, 77° ±18°F, 25° ±10°C						
	Frequency resolution	Digital operator reference: 0.1 Hz Analog reference: 0.06 Hz/60 Hz						
	Output frequency resolution	0.01 Hz (1/30000)						
	Overload capacity	150% rated output current for one minute						
	Frequency setting signal	0 to 10 VDC (20 kΩ), 4 to 20 mA (250 Ω) 0 ±10 V (OPTIONAL)						
	Accel/Decel time	0.1 to 6000 sec. (Accel/Decel time setting independently)						
	Braking torque	Approx. 20%						
	No. of V-f patterns (Total of 16)	4: For general purpose 4: For high starting torque: 1: For adjustable pattern 4: For fans and pumps 3: For machine tools.						
Protective functions	Motor overload protection	Electric thermal overload relay						
	Instantaneous overcurrent	Motor coasts to a stop at approx. 200% rated current.						
	Fuse blown protection	Motor coasts to a stop by blown-fuse.						
	Overload	Motor coasts to a stop for 1 minute at 150% rated output current.						

Inverter Model 3G3IV-□□□□□-□		380 to 460 V						
		A4004	A4007	A4015	A4022	A4037	A4055	A4075
Protective functions	Overvoltage	Motor coasts to a stop if converter output voltage exceeds 800 V.						
	Undervoltage	Motor coasts to a stop if converter output voltage drops to 420 V or below (See Note 3).						
	Momentary power loss	Immediately stop by 15 ms and above momentary power loss. (Continuous system operation during power loss less than 2 sec is equipped as standard. See Note 2.) Setting made before shipment.						
	Fin overheat	Thermostat						
	Stall prevention	Stall prevention at acceleration/deceleration and constant speed operation						
	Ground fault	Provided by electronic circuit						
	Power charge indication	Charge lamp stays ON until bus voltage drops below 50 V.						
Environmental conditions	Location	Indoor (protected from corrosive gases and dust)						
	Ambient temperature	+4° to 104°F (–10° to +40°C) (not frozen)						
	Storage temperature (See Note 4)	–4° to 140°F (–20° to +60°C)						
	Humidity	90% RH (non-condensing)						
	Vibration	1 G less than 20 Hz, up to 0.2 G at 20 to 50 Hz						

Note
1. Our standard 4-pole motor is used for max applicable motor output.
2. Allowable values for the applications not required overload.
3. For Models of 4.1 kVA or less, continuous system operation during power loss less than 1 sec, for models with capacitor (option), less than 2 seconds.
4. Temperature during shipping (for short period).

Models B4110 to B4450

Inverter model 3G3IV-□□□□□-□		380 to 460 V						
		B4110	B4150	B4185	B4220	B4300	B4370	B4450
Max. applicable motor output Hp (kW) (See Note 1)		15 (11)	20 (15)	25 (18.5)	30 (22)	40 (30)	50 (37)	60 (45)
Output characteristics	Inverter capacity kVA	20.6	27.4	34	41	54	68	82
	Rated output current A	24	32	40	48	64	80	96
	Max. continuous output current (See Note 2) A	27	36	45	54	72	90	108
	Max. output voltage	3-phase, 200/208/220/230 V (Proportional to input voltage)						
	Rated output frequency	50, 60, 72, 90, 120, 180 Hz (up to 400 Hz available)						
Power Supply	Rated input voltage and frequency	3-Phase 200/208/220 V, 50 Hz 200/208/220/230 V, 60 Hz						
	Allowable voltage fluctuation	±10%						
	Allowable frequency fluctuation	±5%						
Control characteristics	Control method	Sine wave PWM						
	Frequency control range	0.1 to 400 Hz						
	Frequency accuracy	Digital command: 0.01%, +14° to 104°F, –10° to 40°C Analog command: 0.1%, 77° ±18°F, 25° ±10°C						
	Frequency resolution	Digital operator reference: 0.1 Hz Analog reference: 0.06 Hz/60 Hz						

Inverter model 3G3IV-□□□□□-□		380 to 460 V						
		B4110	B4150	B4185	B4220	B4300	B4370	B4450
Control characteristics	Output frequency resolution	0.01 Hz (1/30000)						
	Overload capacity	150% rated output current for one minute						
	Frequency setting signal	0 to 10 VDC (20 kΩ), 4 to 20 mA (250 Ω) 0 ±10 V (OPTIONAL)						
	Accel/Decel time	0.1 to 6000 sec. (Accel/Decel time setting independently)						
	Braking torque	Approx. 20%						
	No. of V-f patterns (Total of 16)	4: For general purpose 4: For high starting torque: 1: For adjustable pattern 4: For fans and pumps 3: For machine tools.						
Protective functions	Motor overload protection	Electric thermal overload relay						
	Instantaneous overcurrent	Motor coasts to a stop at approx. 200% rated current.						
	Fuse blown protection	Motor coasts to a stop by blown-fuse.						
	Overload	Motor coasts to a stop for 1 minute at 150% rated output current.						
	Overvoltage	Motor coasts to a stop if converter output voltage exceeds 800 V.						
	Undervoltage	Motor coasts to a stop if converter output voltage drops to 420 V or below (See Note 3).						
	Momentary power loss	Immediately stop by 15 ms and above momentary power loss. (Continuous system operation during power loss less than 2 sec is equipped as standard. See Note 2.) Setting made before shipment.						
	Fin overheat	Thermostat						
	Stall prevention	Stall prevention at acceleration/deceleration and constant speed operation						
	Ground fault	Provided by electronic circuit						
	Power charge indication	Charge lamp stays ON until bus voltage drops below 50 V.						
Environmental conditions	Location	Indoor (protected from corrosive gases and dust)						
	Ambient temperature	+4° to 104°F (–10° to +40°C) (not frozen)						
	Storage temperature (See Note 4)	–4° to 140°F (–20° to +60°C)						
	Humidity	90% RH (non-condensing)						
	Vibration	1 G less than 20 Hz, up to 0.2 G at 20 to 50 Hz						

Note
1. Our standard 4-pole motor is used for max applicable motor output.
2. Allowable values for the applications not required overload.
3. For Models of 4.1 kVA or less, continuous system operation during power loss less than 1 sec, for models with capacitor (option), less than 2 seconds.
4. Temperature during shipping (for short period).

Models B4550 to B430K

Inverter model 3G3IV-□□□□□-□		380 to 460 V						
		B4550	B4750	B411K	B416K	B418K	B422K	B430K
Max. applicable motor output Hp (kW) (See Note 1)	Rated output	75 (55)	100 (75)	150 (110)	200 (160)	250 (185)	300 (220)	400 (300)
	Max. continuous output	100 (75)	150 (110)	200 (160)	250 (185)	300 (220)	400 (300)	500 (355)
Output characteristics	Inverter capacity kVA	110	140	200	250	290	380	510
	Rated output current A	128	165	224	300	340	450	600
	Max. continuous output current (See Note 2) A	144	180	252	337	380	506	675
	Max. output voltage	3-phase, 380/400/415/440/460 V (Proportional to input voltage)						
	Rated output frequency	50, 60, 72, 90, 120, 180 Hz (up to 400 Hz available)						
Power Supply	Rated input voltage and frequency	3-Phase 380/400/415/440/460 V, 50/60 Hz						
	Allowable voltage fluctuation	±10%						
	Allowable frequency fluctuation	±5%						
Control characteristics	Control method	Sine wave PWM						
	Frequency control range	0.1 to 400 Hz						
	Frequency accuracy	Digital command: 0.01%, +14° to 104°F, –10° to 40°C Analog command: 0.1%, 77° ±18°F, 25° ±10°C						
	Frequency resolution	Digital operator reference: 0.1 Hz Analog reference: 0.06 Hz/60 Hz						
Control characteristics	Output frequency resolution	0.01 Hz (1/30000)						
	Overload capacity	150% rated output current for one minute/ 110% max. continuous output current for one minute						
	Frequency setting signal	0 to 10 VDC (20 kΩ), 4 to 20 mA (250 Ω), 0 ±10 V (OPTIONAL)						
	Accel/Decel time	0.1 to 6000 sec. (Accel/Decel time setting independently)						
	Braking torque	Approx. 20%						
	No. of V-f patterns (Total of 16)	4: For general purpose 4: For high starting torque: 4: For fans and pumps 3: For machine tools.						
Protective functions	Motor overload protection	Electric thermal overload relay						
	Instantaneous overcurrent	Motor coasts to a stop at approx. 200% rated current.						
	Fuse blown protection	Motor coasts to a stop by blown-fuse.						
	Overload	Motor coasts to a stop for 1 minute at 150% rated output current./motor coasts to a stop for 1 minute at 110% max. continuous output current.						
	Overvoltage	Motor coasts to a stop if converter output voltage exceeds 800 V. (approx. 700 V) (see Note 3)						
	Undervoltage	Motor coasts to a stop if converter output voltage drops to 420 V or below.						
	Momentary power loss	Immediately stop by 15 ms and above momentary power loss. (Continuous system operation during power loss less than 2 sec is equipped as standard.) Setting made before shipment.						
	Fin overheat	Thermostat						

Inverter model 3G3IV-□□□□□-□		380 to 460 V						
		B4550	B4750	B411K	B416K	B418K	B422K	B430K
	Stall prevention	Stall prevention at acceleration/deceleration and constant speed operation						
	Ground fault	Provided by electronic circuit						
	Power charge indication	Charge lamp stays ON until bus voltage drops below 50 V.						
Environmental conditions	Location	Indoor (protected from corrosive gases and dust)						
	Ambient temperature	Enclosed type, totally-enclosed type: +14° to 104°F (–10° to +40°C) Open chassis type: +14° to 122°F (–10° to +50°C) (not frozen) (see note 4)						
	Storage temperature (See Note 5)	–4° to 140°F (–20° to +60°C)						
	Humidity	90% RH (non-condensing)						
	Vibration	9.81 m/s^2 1 G less than 20 Hz, up to 0.2 G at 20 to 50 Hz						

Note
1. Our standard 4-pole motor is used for max applicable motor output.
2. Application of variable torque rating requires adjustment of 4th digit of Sn-14: from 0 to 1 (0□□□ to 1□□□)
3. Approx. 700 V when input voltage set value (Cn-01) is less than 400.0 V approx. 800 V when it exceeds 400.0 V.
4. Up to 122°F (50°C) allowed when front cover is removed (open chassis type).
5. Temperature during shipping (for short period).

Appendix B
Optional Equipment

Option Cards

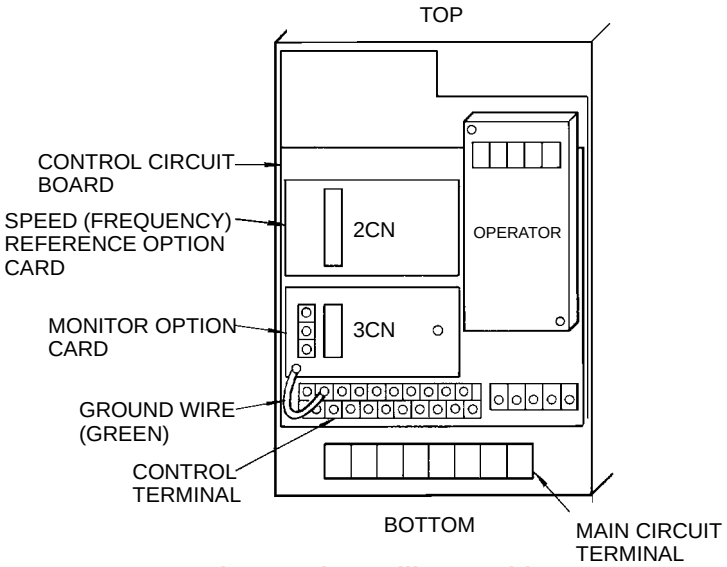

Option Card Installing Position

Names		Function	Installing position
Speed Reference	Analog Speed Reference Card 3G3IV-PAI14U	Permits setting a high-accuracy, high-resolution analog speed reference. Input signal level: 0 to +10 VDC (20 kW) 1 channel 4 to 20 mA DC (250 W) 1 channel Input resolution: 14 bits (1/16384)	Attach the card at 2CN on the control circuit board. (See Note 1)
	Analog Speed Reference Card 3G3IV-PAI14B	Permits setting a high-accuracy, high-resolution analog speed reference. Input signal level: 0 to ±10 VDC (20 kW) 4 to 20 mA DC (250 W) 3 channels Input resolution: 13 bits + sign (1/8192)	Attach the card at 2CN on the control circuit board. (See Note 1)
	Digital Speed Reference Card 3G3IV-PDI08	Permits setting an 8-bit digital speed reference. Input signal: Binary 8 bits/BCD 2 digits + sign Input voltage: +24 V (insulated) Input current: 8 mA	Attach the card at 2CN on the control circuit board. (See Note 1)
PC Interface Card	SYSMAC BUS (Wired): 3G3IV-PSIG	Permits automatic Inverter operation, Inverter status monitoring, and Inverter data setting from the PC. Applicable PCs: C200H, C500, C1000H, C2000H, CV-series PCs	Attach the card at 2CN on the control circuit board. (See Note 2)
	SYSMAC BUS/2 (Optical): 3G3IV-PSIF	Permits automatic Inverter operation, Inverter status monitoring, and Inverter data setting from the PC. Applicable PCs: CV-series PCs	Attach the card at 2CN on the control circuit board.

Names		Function	Installing position
Monitor	Analog Monitor Card 3G3IV-PAO08	Provides an analog signal for monitoring the output state (output frequency, output current, etc.) of the inverter. Output resolution: 8 bits (1/256) Output voltage: 0 to +10 V (not insulated) Output channel: 2 channels	Attach the card at 3CN on the control circuit board. (See Note 3)
	Analog Monitor Card 3G3IV-PAO12	Provides an analog signal for monitoring the output state (output frequency, output current, etc.) of the inverter. Output resolution: 11 bits (1/2048) Output voltage: 0 to +10 V (not insulated) Output channel: 2 channels	Attach the card at 3CN on the control circuit board. (See Note 3)
	Pulse Monitor Card 3G3IV-PPO36F	Provides a pulse string signal corresponding to the output frequency of the inverter. Output pulse: 1F, 6F, 10F, 12F, 36F, (F: Output frequency) Output voltage: +12 V ±10 % (insulated) Output current: 20 mA max.	Attach the card at 3CN on the control circuit board. (See Note 3)

Note 1. Only one of the speed (frequency) reference option cards can be attached at 2CN.
2. A Monitor Card cannot be mounted simultaneously.
3. Only one of the monitor option cards can be attached at 3CN.

Optional Unit

Name	Model	Function	Installing position
Digital monitor	3G3IV-PJVOP101	Permits display of frequency and current by digital monitor and indication of a problem. Equipped with protections for ON/OFF operation and setting a constant so that it can be safely used in the field.	On the inverter front cover (See Note)
Operator/Monitor adapter	3G3IV-PJVOP109	This removable adapter panel can be used on the inverter cover with an extension cable when the digital operator or digital monitor needs to be removed from the inverter cover.	On the inverter front cover (See Note)
Exclusive extension cable for digital operator or monitor	1-meter cable (3G3IV-PCN121) 3-meter cable (3G3IV-PCN321)	This extension cable is used when the digital operator or digital monitor is used after removing from the inverter front cover. The cable is available in 1- and 3-meter lengths. The package of the extension cable includes a simple blind panel. Depending on the application, the use of the operator/monitor adapter JVOP-109 is recommended.	On the inverter front cover (blind panel)
Exclusive extension cable for adapter	1-meter cable (3G3IV-PCN122) 3-meter cable (3G3IV-PCN322)	This extension cable is used when the digital operator or digital monitor is controlled remotely via adapter (3G3IV-PJVOP109).	On the inverter front cover
Damping unit	3G3IV-PCDBR□□□□	Used in combination with the damping resistor unit to reduce motor deceleration time.	Separately installed
Damping resistor unit	3G3IV-PLKEB□□□□	Shortens the motor deceleration time by causing the regenerative energy to be consumed through the resistor.	Separately installed
Capacitor unit for momentary power loss.	3G3IV-PP00□0	Designed for momentary loss of control power. (Backup time: 2 sec.)	Separately installed

Note Only one of the options PJVOP 101 and 109, used on the front cover of the inverter can be installed at a time. When attaching such an option on the front cover, the digital operator PJVOP 100, provided as a standard feature) must be removed.

Appendix C
Dimensions

200 to 230 V

0.5 to 2 HP (0.4 to 1.5 kW) (Model 3G3IV-A2004-E to A2015-E) Enclosed Wall-mounted Type

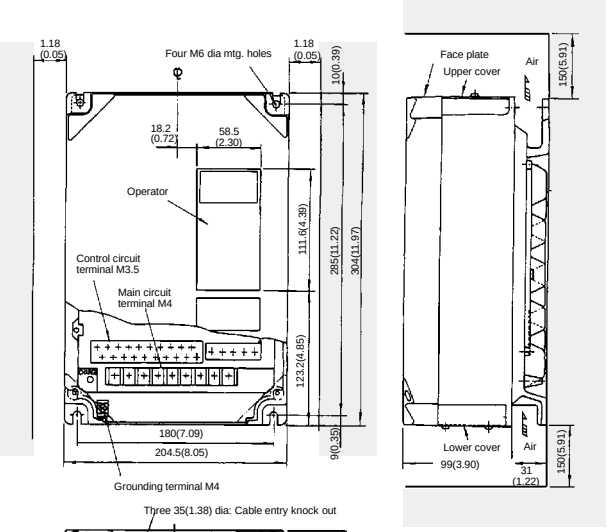

Weight 4 kg (9 lb)

Note: To use the unit in the panel, remove the upper and lower covers.

3 to 5 HP (2.2 to 3.7 kW) (Model 3G3IV-A2022-E to A2037-E) Enclosed Wall-mounted Type

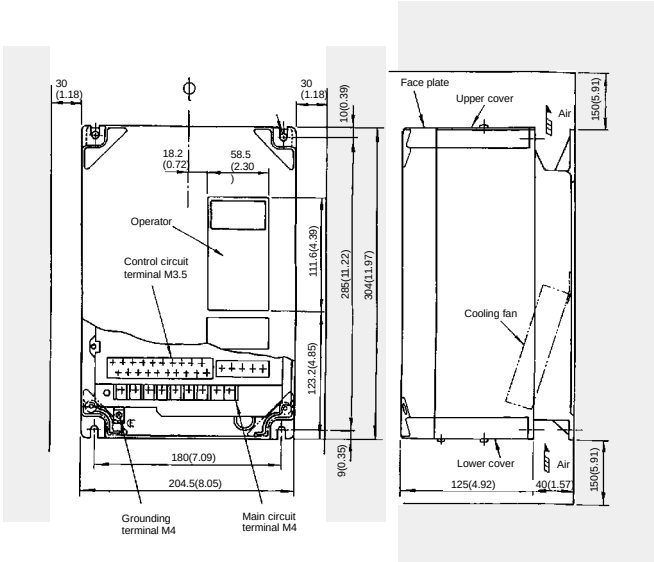

Weight: 7 kg (15.43 lb)

Note: To use the unit in the panel, remove the upper and lower covers.

7.5 to 10 HP (5.5 to 7.5 kW) (Model 3G3IV-A2055-E to A2075-E) Enclosed Wall-mounted Type

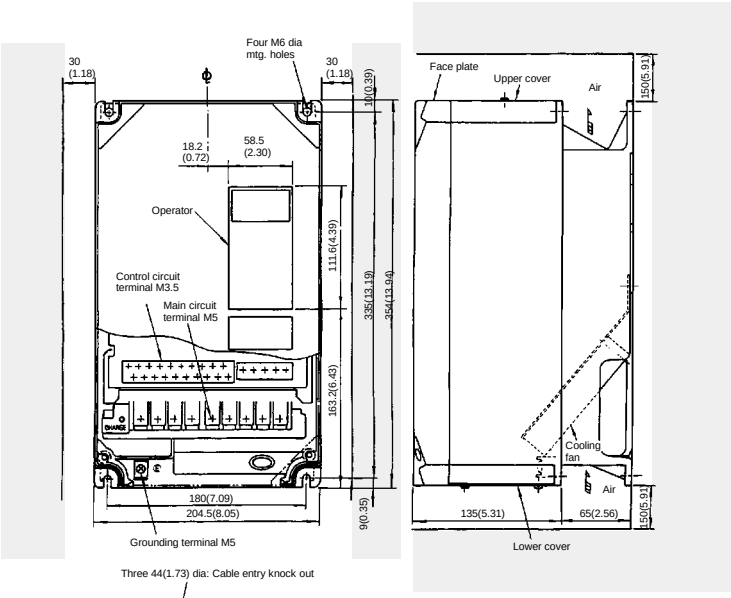

Weight: 10 kg (22.05 lb)

Note: To use the unit in the panel, remove the upper and lower covers.

15 HP (11 kW) (Model 3G3IV-B2110-E) Open Chassis Type

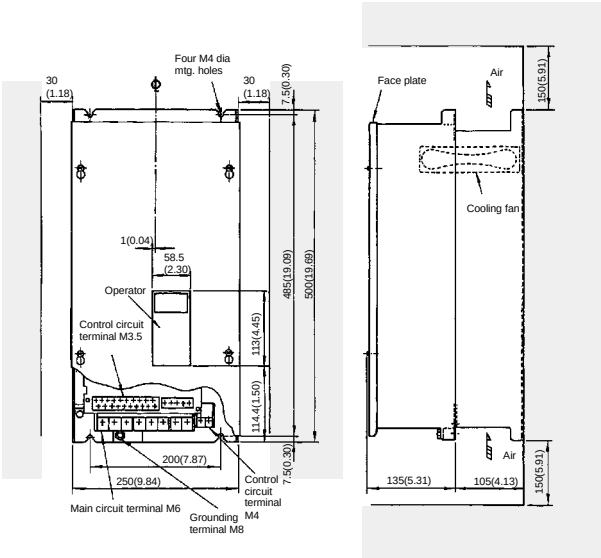

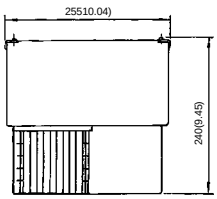

Weight 19 kg (42 lb)

20 HP (15 kW) (Model 3G3IV-B2150-E) Open Chassis Type

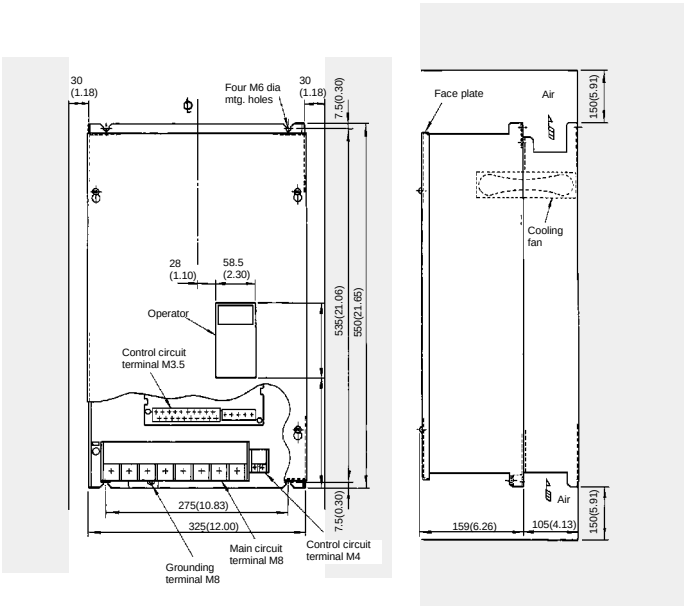

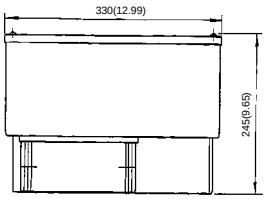

Weight: 24 kg (52.91 lb)

25 to 30 HP (18.5 to 22 kW) (Model 3G3IV-B2185-E to B2220-E) Open Chassis Type

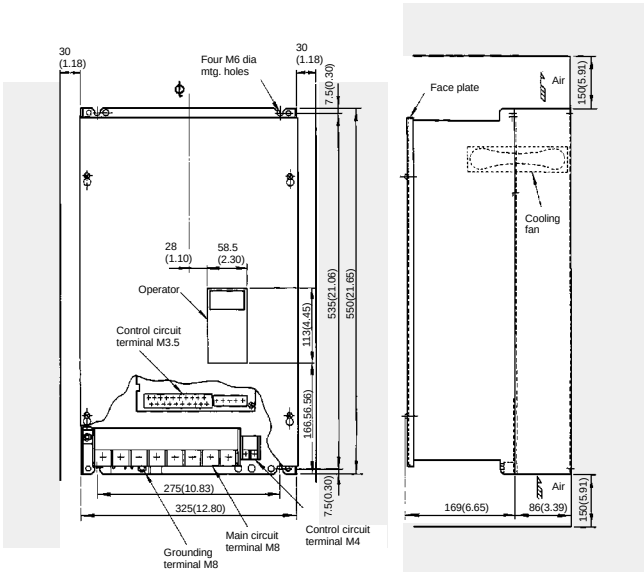

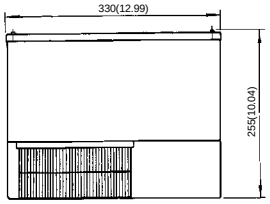

Weight: 32 kg (70.55 lb)

40 HP (30 kW) (Model 3G3IV-B2300-E) Open Chassis Type

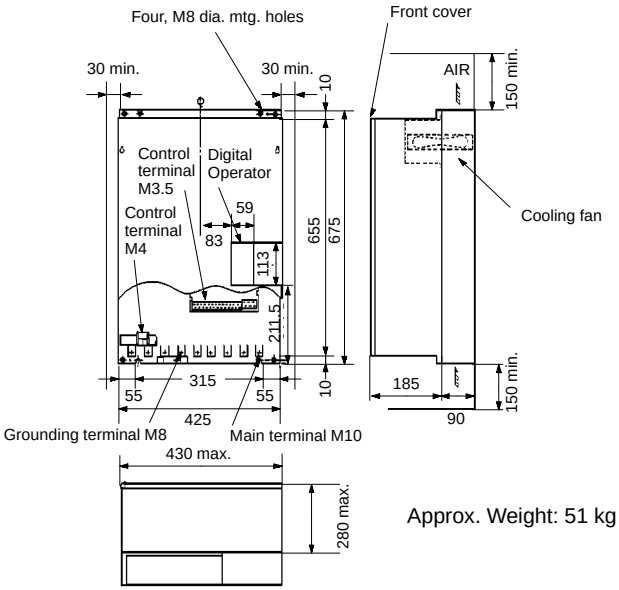

Approx. Weight: 51 kg

50 HP (37 kW) (Model 3G3IV-B2370-E) Open Chassis Type

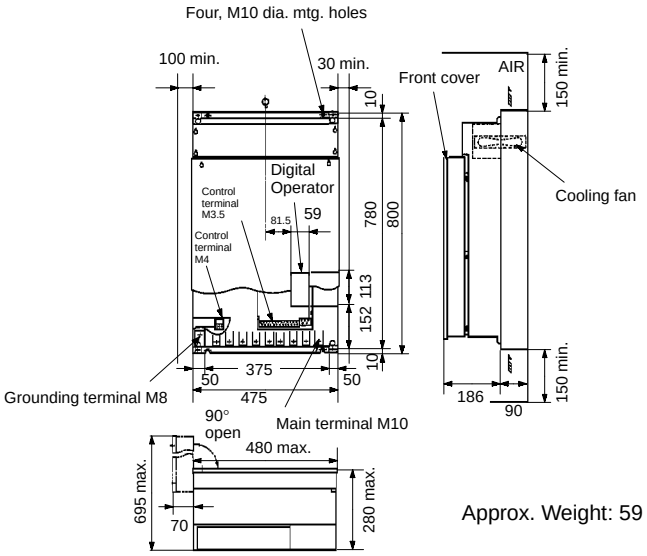

Approx. Weight: 59 kg

60/75 HP (45/55 kW) (Model 3G3IV-B2450-E to B2550-E) Open Chassis Type

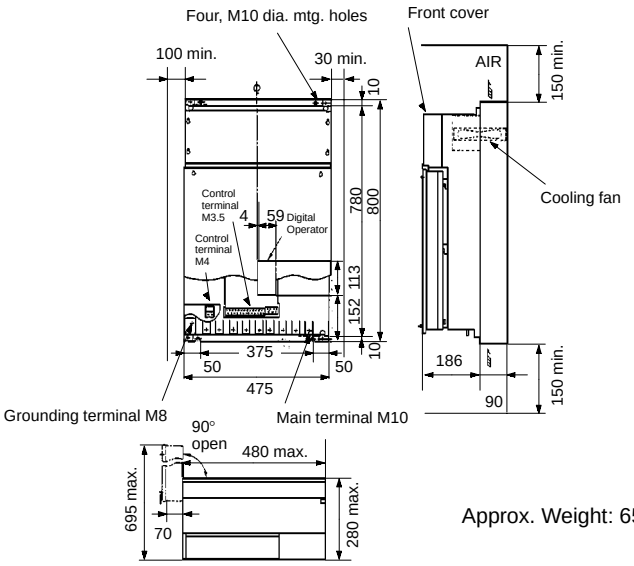

Approx. Weight: 65 kg

100 HP (75 kW) (Model 3G3IV-B2750-E) Open Chassis Type

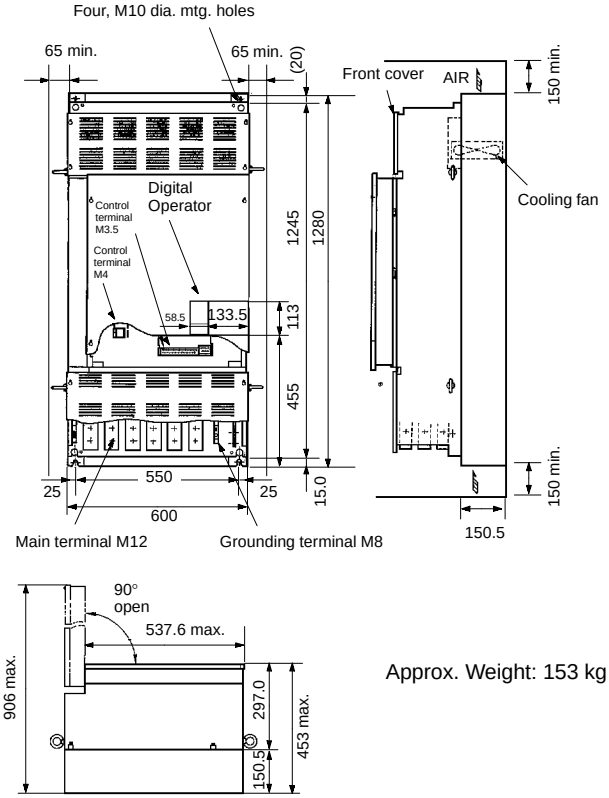

Approx. Weight: 153 kg

380 to 460 V

0.5 to 3 HP (0.4 to 2.2 kW) (Model 3G3IV-A4004-E to A4022-E) Enclosed Wall-mounted Type

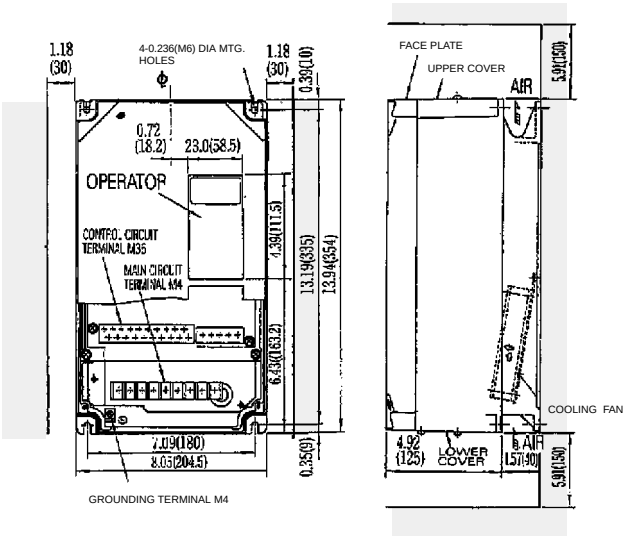

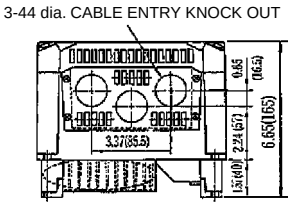

Approx. Weight:
15 lb (7kg)

Note: To use the unit in the panel, remove the upper and lower covers.

5 to 10 HP (3.7 to 7.5 kW) (Model 3G3IV-A4037-E to A4075-E) Enclosed Wall-mounted Type

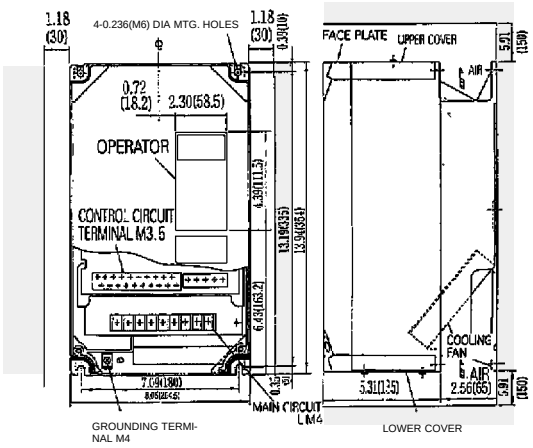

THREE, 44DIA. CABLE ENTRY KNOCK OUT

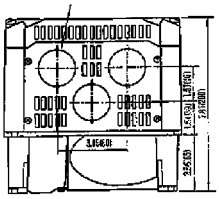

Approx. Weight:
22 lb (10 kg)

Note: To use the unit in the panel, remove the upper and lower covers.

15 to 20 HP (11 to 15 kW) (Model 3G3IV-B4110-E to B4150-E) Enclosed Wall-mounted Type

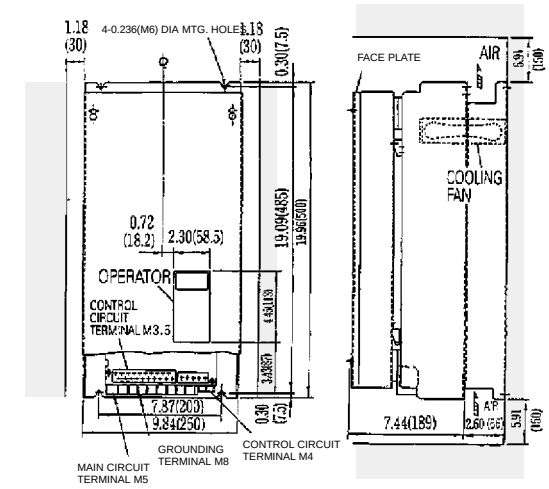

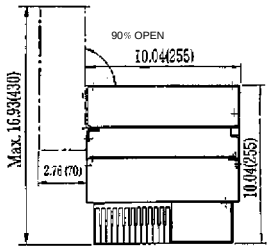

MODEL	WEIGHT
3G3IV-B4110-E	46 lb (21 kg)
3G3IV-B4150-E	48 lb (22 kg)

25 to 30 HP (18.5 to 22 kW) (Model 3G3IV-B4185-E to B4220-E) Open Chassis Type

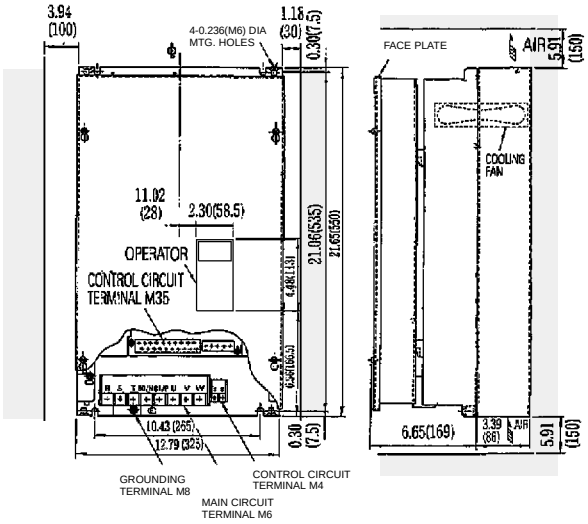

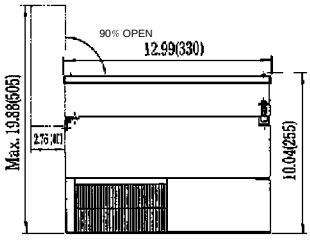

Approx. Weight:
70 lb (32 kg)

40 to 50 HP (30 to 37 kW) (Model 3G3IV-B4300-E to B4370-E) Open Chassis Type

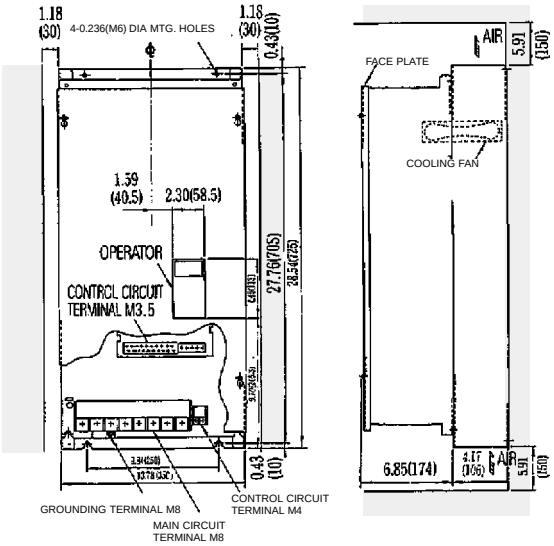

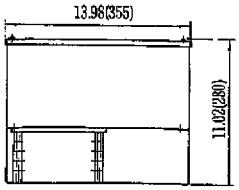

MODEL	WEIGHT
3G3IV-B4300-E	93 lb (42 kg)
3G3IV-B4370-E	99 lb (45 kg)

60 HP (45 kW) (Model 3G3IV-B4450-E) Open Chassis Type

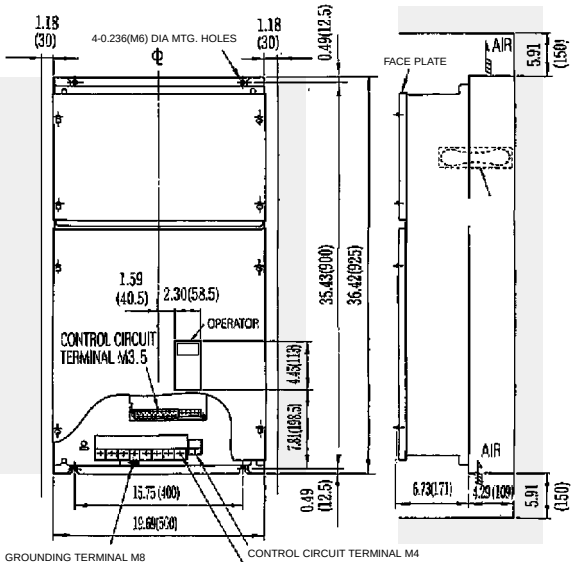

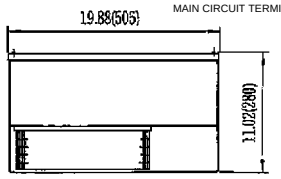

Approx. Weight: 165 lb (75 kg)

75 to 100 HP (55 to 75 kW) (Model 3G3IV-B4550-E to B4750-E) Open Chassis Type

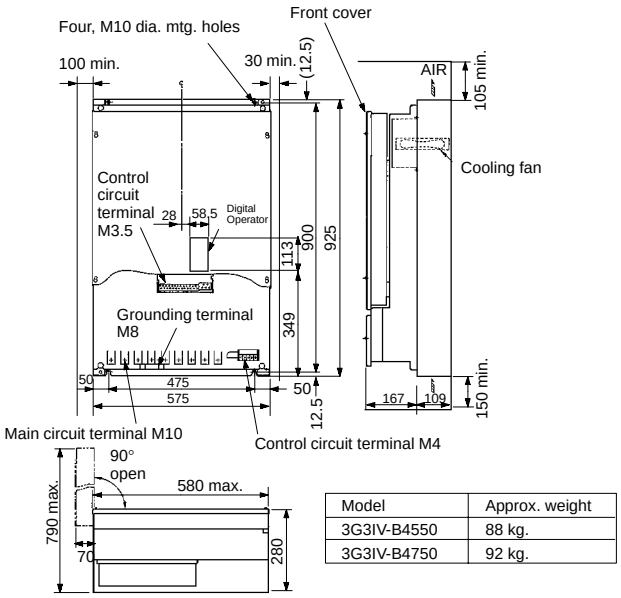

Model	Approx. weight
3G3IV-B4550	88 kg.
3G3IV-B4750	92 kg.

150 HP (110 kW) (Model 3G3IV-B411K-E) Open Chassis Type

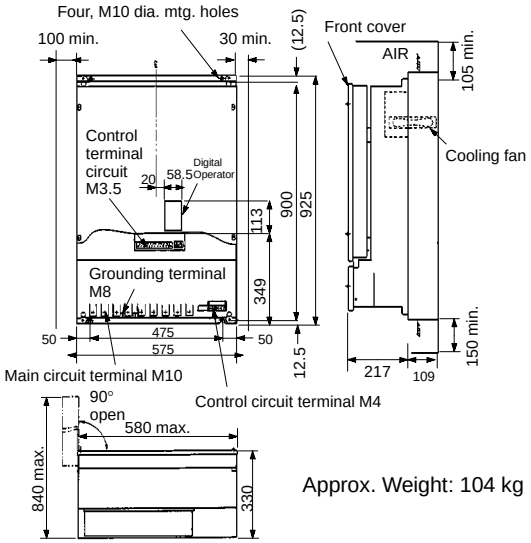

Approx. Weight: 104 kg

200 HP (160 kW) (Model 3G3IV-B416K-E) Open Chassis Type

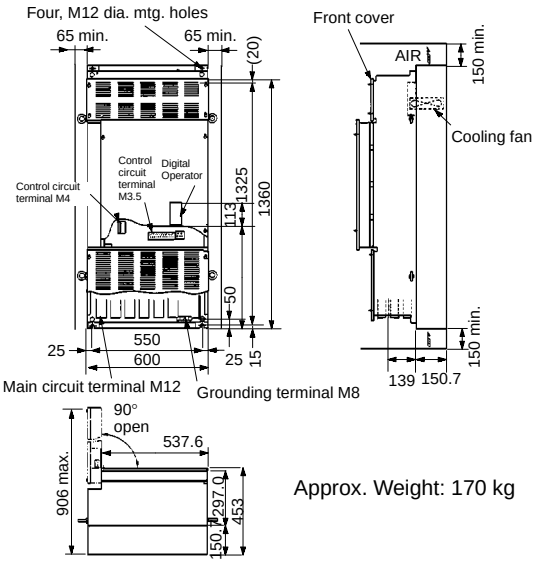

Approx. Weight: 170 kg

250/300 HP (185/220 kW) (Model 3G3IV-B418K-E to B422K-E) Open Chassis Type

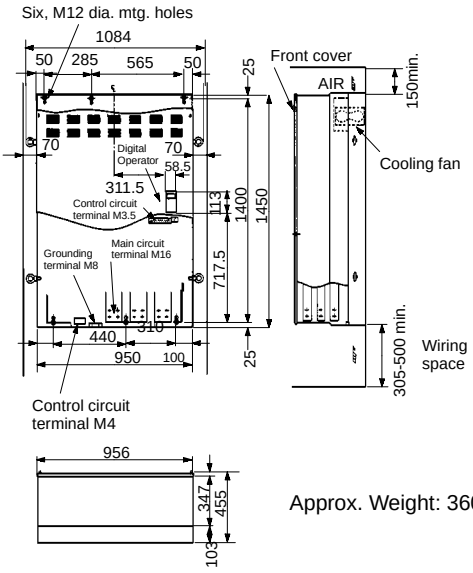

Approx. Weight: 360 kg

400 HP (300 kW) (Model 3G3IV-B430K-E) Open Chassis Type

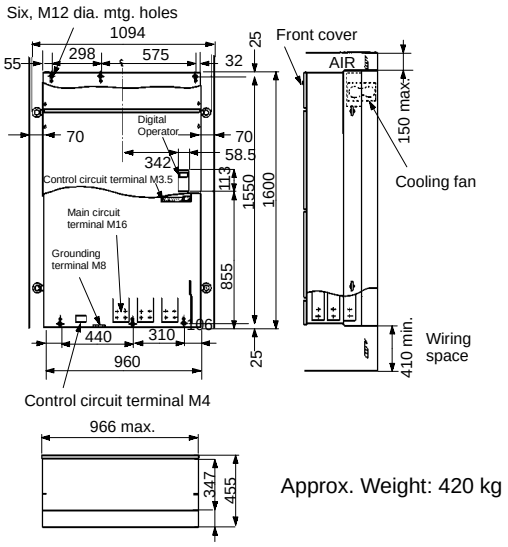

Approx. Weight: 420 kg

Dimensions

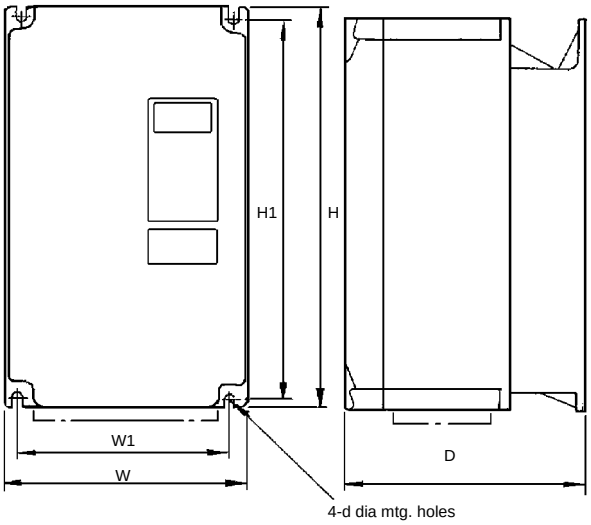

The dimensions to the above shows Model 3G3IV-A2075-E.

Remove the upper and lower covers of the enclosed type units when it is applied as the open chassis type.

Voltage	Enclosure	Model 3G3IV-____-_	Dimensions mm (inch)						Approx. weight
			W	H	D	W1	H1	d	kg (lb)
200 to 230 V	Open chassis type	A2004, A2007, A2015	205 (8.07)	305 (12.01)	130 (5.12)	180 (7.09)	285 (11.22)	M6	4 (9)
		A2022, A2037	205 (8.07)	305 (12.01)	165 (6.50)	180 (7.09)	285 (11.22)	M6	7 (15)
		A2055, A2075	205 (8.07)	355 (14.00)	200 (7.87)	180 (7.09)	335 (13.19)	M6	10 (22)
		B2110	250 (9.84)	500 (19.69)	240 (9.45)	200 (7.87)	485 (19.09)	M6	19 (42)
		B2150	325 (12.79)	550 (21.65)	245 (9.65)	275 (10.83)	535 (21.06)	M6	24 (53)
		B2185, B2220	325 (12.79)	550 (21.65)	255 (10.04)	275 (10.83)	535 (21.06)	M6	32 (70)
		B2300	425 (16.73)	675 (26.57)	280 (11.02)	315 (12.40)	655 (25.79)	M8	51 (112)
		B2370	475 (18.70)	800 (31.50)	280 (11.02)	375 (14.76)	780 (30.71)	M10	59 (130)
		B2450, B2550	475 (18.70)	800 (31.50)	280 (11.02)	375 (14.76)	780 (30.71)	M10	65 (143)
		B2750	600 (23.62)	1,280 (50.39)	453 (17.83)	550 (21.65)	1,245 (49.02)	M12	153 (337)
	Enclosed type (NEMA 1)	A2004, A2007, A2015	205 (8.07)	305 (12.01)	130 (5.12)	180 (7.09)	285 (11.22)	M6	4 (9)
		A2022, A2037	205 (8.07)	305 (12.01)	165 (6.50)	180 (7.09)	285 (11.22)	M6	7 (15)
		A2055, A2075	205 (8.07)	355 (14.00)	200 (7.87)	180 (7.09)	335 (13.19)	M6	10 (22)
380 to 460 V	Open chassis type	A4004, A4007, A4015, A4022	205 (8.07)	355 (14.00)	165 (6.50)	180 (7.09)	335 (13.19)	M6	7 (15)
		A4037, A4055, A4075	205 (8.07)	355 (14.00)	200 (7.87)	180 (7.09)	335 (13.19)	M6	10 (22)
		B4110, B4150	250 (9.84)	500 (19.69)	255 (10.04)	200 (7.87)	485 (19.09)	M6	22 (48)
		B4180, B4220	325 (12.79)	550 (21.65)	255 (10.04)	265 (10.43)	535 (21.06)	M6	32 (70)
		B4300, B4370	350 (13.78)	725 (28.54)	280 (11.02)	250 (9.84)	705 (27.76)	M8	45 (99)
		B4450	500 (19.69)	925 (36.42)	280 (11.02)	400 (15.75)	900 (35.43)	M10	75 (165)
		B4550	575 (22.64)	925 (36.42)	280 (11.02)	475 (18.70)	900 (35.43)	M10	88 (194)
		B4750	575 (22.64)	925 (36.42)	280 (11.02)	475 (18.70)	900 (35.43)	M10	92 (203)
		B411K	575 (22.64)	925 (36.42)	330 (12.99)	475 (18.70)	900 (35.43)	M10	104 (229)
		B416K	600 (23.62)	1,360 (53.54)	453 (17.83)	550 (21.65)	1,325 (52.17)	M12	170 (374)
		B418K, B422K	950 (37.40)	1,450 (57.09)	435 (17.13)	---	1,400 (55.12)	M12	360 (793)
		B430K	960 (37.97)	1,600 (62.99)	455 (17.91)	---	1,550 (61.02)	M12	420 (925)
	Enclosed type (NEMA 1)	A4004, A4007, A4015, A4022	8.07 (205)	14.00 (355)	6.50 (165)	7.09 (180)	13.19 (335)	M6	7 (15)
		A4037, A4055, A4075	8.07 (205)	14.00 (355)	7.87 (200)	7.09 (180)	13.19 (335)	M6	10 (22)

Inverter Unit Cooling Fin Dimensions

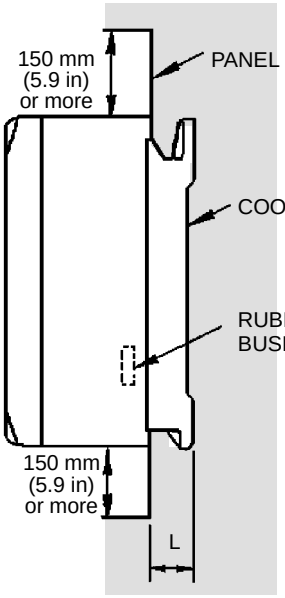

0.4 to 15 kW (0.5 to 2 HP)

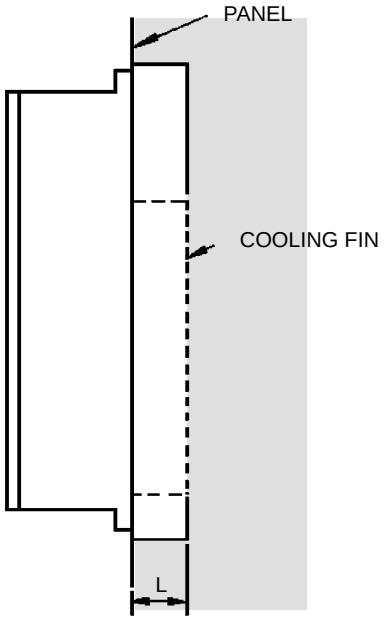

18.5 to 45 kW (25 to 60 HP)

200 to 230 V

Model 3G3IV-____-_	A2004 A2007	A2015	A2022 A2037	A2055 A2075	B2110	B2150 to B2220	B2030 to B2055	B2075
Cooling fin Dimensions L max. mm (inch)	31 (1.22)	31 (1.22)	40 (1.57)	65 (2.56)	105 (4.13)	86 (3.39)	90 (3.54)	150.7 (5.93)
Number of rubber bushings	–––	4	6	2	–––	–––	–––	–––

200 to 230 V

Voltage class	380 to 400 V								
Model 3G3IV-____-_	A4004 to A4022	A4037 to A4075	B4110 B4150	B4185 B4220	B4300 B4370	B4450	B4550 to B411K	B416K	B418K to B430K
Cooling fin Dimensions L max. mm (inch)	40 (1.57)	65 (2.56)	66 (2.60)	86 (3.39)	106 (4.17)	109 (4.29)	109 (4.29)	150.7 (5.93)	103 (4.06)
Number of rubber bushings	---	2	---	---	---	---	---	---	---

Note: For installation on a totally-enclosed type control panel, rubber bushing may be required depending on the model. Procure necessary rubber bushings separately.

Revision History

A manual revision code appears as a suffix to the catalog number on the front cover of the manual.

Cat. No. I002-E1-3C

Revision code

The following table outlines the changes made to the manual during each revision. Page numbers refer to the previous version.

Revision code	Date	Revised content
1	October 1991	Original production
1A	January 1992	Changes and additions accompanying new version of the Inverter. **Page 3:** Model number changed for new version. **Page 53:** PC Interface Card added. **Page 54:** Note added to top table. **Page 58:** Dimensions added for 380 to 460-V models (three new pages). **Pages 62 and 63:** Dimensions changed in tables.
2	June 1992	Changes and additions accompanying new version of the Inverter. **Page 3:** Model number changed for new version. **Page 28:** Display Function Additions added (Section 4-3).
3	November 1993	Changes and additions accompanying new version of the Inverter. **Page 3:** Model number changed for new version. **Page 8 to 13:** Specifications added to MCCB tables. **Page 32:** Additions made to Main Circuit table. **Page 38 to 50:** New Unit circuit diagrams and specification tables added to section. **Page 51 to 62:** Specifications added to tables throughout *Appendix A.* **Page 65 to 77:** Dimension diagrams and specifications added throughout *Appendix C.*
3A	December 1993	Corrections of mistakes and warnings added. **Page 15:** Ground wiring diagrams corrected. **Page 7:** Three notes on wiring have been added.
3B	April 1994	**Page 2:** Model number on the name plate corrected. **Page 3:** Applicable maximum motor output corrected for the model number legend.
3C	June 1995	**Page 42:** “B0/(–)” has been corrected to “B2.”

OMRON®

OMRON ELECTRONICS LLC

1 Commerce Drive
Schaumburg, IL 60173
847.843.7900
For US technical support or
other inquiries: 800.556.6766

OMRON CANADA, INC.

885 Milner Avenue
Toronto, Ontario M1B 5V8
416.286.6465

OMRON ON-LINE

Global - http://www.omron.com
USA - http://www.omron.com/oei
Canada - http://www.omron.ca

UNITED STATES

To locate a Regional Sales Office, local Distributor or to obtain product information, call: 847.843.7900

CANADA REGIONAL SALES OFFICES

Ontario	Toronto	416.286.6465
	Kitchener	519.896.1144
	Kingston	613.376.3968
Quebec	Montreal	514.636.6676
British Columbia	Vancouver	604.522.8855
Alberta	Edmonton	403.440.0818
	Calgary	403.257.3095

BRAZIL SALES OFFICE

Sao Paulo 55.11.5564.6488

ARGENTINA SALES OFFICE

Cono Sur 54.114.787.1129

MEXICO SALES OFFICES

Florida 954.227.2121 **Ciudad Juarez** 656.623.7083
Mexico, D.F. 555.534.1195 **Monterrey, N.L.** 818.377.4281

I002-E1-3B